CAME

CAME.COM

FA01177-EN

Operator
for swing gates

FE40230 - FE40230V

INSTALLATION MANUAL

EN English

CAUTION!
important personal safety instructions:
READ CAREFULLY!

Foreword

• This product should only be used for the purpose for which it was explicitly designed. Any other use is considered dangerous. CAME S.p.A. is not liable for any damage resulting from improper, wrongful or unreasonable use • Keep these warnings with the installation and use manuals issued with the automation system.

Before installing

(preliminary check: in case of a negative outcome, do not proceed until you have complied with the safety requirements)

• Check that the part you intend to automate is in good mechanical condition, balanced and aligned, and that it opens and closes properly. Make sure that proper mechanical stops are already in place • If the operator will be installed at a height of less than 2.5 m from the ground or other access level, check whether you will need any protections and/or warnings • Any gate leaves fitted with pedestrian entrances onto which you will install an operator must have a blocking mechanism when the gate is in motion • Make sure that the opening of the automated gate is not an entrapment hazard as regards any surrounding fixed parts • Do not mount the operator upside down or onto any elements that may fold under its weight. If needed, add suitable reinforcements at the points where it is secured • Do not install onto gates not on level ground • Check that any lawn watering devices will not wet the operator from the bottom up.

Installation

• Carefully section off the entire site to prevent unauthorised access, especially by minors and children • Be careful when handling operators that weigh more than 20 kg. In such cases, use proper weight handling safety equipment • All opening commands (e.g. buttons, key selector switches, magnetic detectors etc.) must be installed at least 1.85 m from the gate's area of operation perimeter - or where they cannot be reached from the outside of the gate. Also, the direct commands (buttons, touch commands etc.) must be installed at a height of at least 1.5 m and must not be accessible to the public • All 'hold-to-run' commands must be placed where the moving gate leaves, transit areas and driveways are completely visible • If missing, apply a permanent label that shows the position of the release mechanism • Before delivering to the user, check that the system is EN 12453 (impact test) standard compliant. Make sure that the operator has been properly adjusted and that the safety and protection devices as well as the manual release are working properly • Where necessary and in plain sight, apply the Warning Signs (e.g. gate plate)

Special instructions and advice for users

• Keep the gate's area of operation clean and clear of any obstacles. Check that there is no vegetation in the area of operation of the photocells and that there are no obstacles in the area of operation of the operator • Do not allow children to play with the fixed command devices, or in the gate's area of operation. Keep any remote control devices (i.e. transmitters) or any control devices away from children as well, to prevent the operator from being activated accidentally •The operator is not designed to be used by persons (including children) whose physical, sensorial or mental capacities are limited, or who are lacking in experience or knowledge, unless said persons can be supervised or given instructions regarding using the operator by a person responsible for their safety • Frequently check the system, to see whether any anomalies or signs of wear and tear appear on the moving parts, on the component parts, on the securing points, on the cables and any accessible connections. Keep any joints (i.e. hinges) lubricated and clean, and do the same where friction may occur (i.e. slide rails) • Perform functional tests on photocells and sensitive edges every six months. To check that the photocells work, pass an object in front of them during closing. If the operator reverses the direction of movement or comes to a halt, the photocells work correctly. This is the only maintenance operation that must be carried out while the operator is live. Ensure that the glass on the photocells is kept clean (use a cloth slightly moistened with water; do not use solvents or any other chemicals as these could damage the devices) • If the system requires repairs or modifications, release the operator and do not use it until safety conditions have been restored • Cut off the power supply before releasing the operator for manual openings and before any other operation, to prevent dangerous situations. Read the instructions • If the power cable is damaged, it must be replaced by the manufacturer or the technical assistance service or by a person with a similar qualification so as to prevent any risks • It is STRICTLY FORBIDDEN for users to perform OPERATIONS THEY ARE NOT EXPLICITLY REQUIRED AND ASKED to do in the manuals. For repairs, adjustments and extraordinary maintenance, CONTACT THE SPECIALIST TECHNICAL SERVICE CENTRE • On the periodic maintenance log, note down the checks you have done.

Special instructions and advice for all

• Avoid working near the hinges or moving mechanical parts • Stay clear of the gate's area of operation when in motion • Do not resist the direction of movement of the gate; this may present a safety hazard • At all times be extremely careful about dangerous points that must be indicated by proper pictograms and/or black and yellow stripes • When using a selector or command in 'hold-to-run' mode, keep checking that there are no people in the area of operation of the moving parts. Do this until you release the command • The gate may move at any time without warning • Always cut the power when cleaning or performing maintenance.

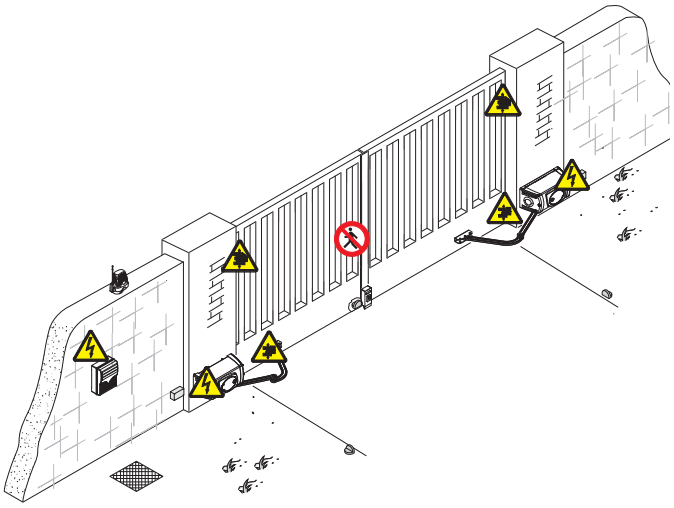

Danger of crushing feet

Danger of hand crushing

Danger - live parts

No transit during the manoeuvre

Manual **FA01177-EN** - 05/2018 - © CAME S.p.A. - The contents of this manual may change, at any time, and without notice. - Translated original instructions

KEY

📖 This symbol indicates parts to read carefully.
⚠ This symbol indicates parts about safety.
☞ This symbol tells you what to say to the end users.

DESCRIPTION

The gearmotor consists of die cast aluminium casing with a worm screw and spiral ring gear system inside. Permanent liquid grease lubrication.

Intended use

The FE40230V/FE40230V gearmotor has been designed and built by CAME S.p.A. in compliance with current safety standards to motorise swing gates for residential or condominium use.

📖 Any installation and operation that differs from what is set out in this manual is prohibited.

Limits of use

With articulated arm and max leaf opening of 90°:

Type	FE40230 - FE40230V				
Gate leaf width (m)	4	3,5	3	2,5	2
Gate leaf weight (kg)	400	450	500	600	800

With straight arm (OPTIONAL) and max leaf opening to 90°:

Type	FE40230 - FE40230V		
Gate leaf width (m)	2,5	2	1,5
Gate leaf weight (kg)	300	500	550

We suggest you always fit an electrolock onto swing gates for a more reliable closure.
Fitting electrolocks onto reversible operators makes for anti-intrusion security.
You must install electrolocks onto irreversible operators with gate leaves exceeding 2.5 m.

Packing list

1. 1 x gearmotor
2. 1 x pillar bracket
3. 1 x gate bracket
4. 1 x cover
5. 1 x right side cover
6. 1 x left side cover
7. 1 x installation manual
8. 1 x transmission arm
9. 1 x driven arm
10. 1 x UNI5933 M6x20 screw
11. 1 x UNI5739 M8x16 screw
12. 2 x UNI5931 M8x120 screws
13. 4 x UNI6954 3.9x16 screws
14. 1 x UNI5737 M12x50 screw
15. 2 x UNI6957 2.9x19 screws
16. 2 x UNI6954 2.9x9.5 screws
17. 2 x UNI6954 3.9x19 screws
18. 2 customised door keys
19. 1 x UNI7774 M12 nut
20. 2 x UNI5588 M8 nuts
21. 1 x washer
22. 1 x washer
23. 1 x side panel for transmission arm passage
24. 1 x release handle
25. 4 x UNI8112 M3x6 screws
26. 2 x cams
27. 1 x arm bushing
28. 1 x U-bolt
29. 2 x special M4x20 screws for fixing side covers
30. 1 x side panel for cable passage

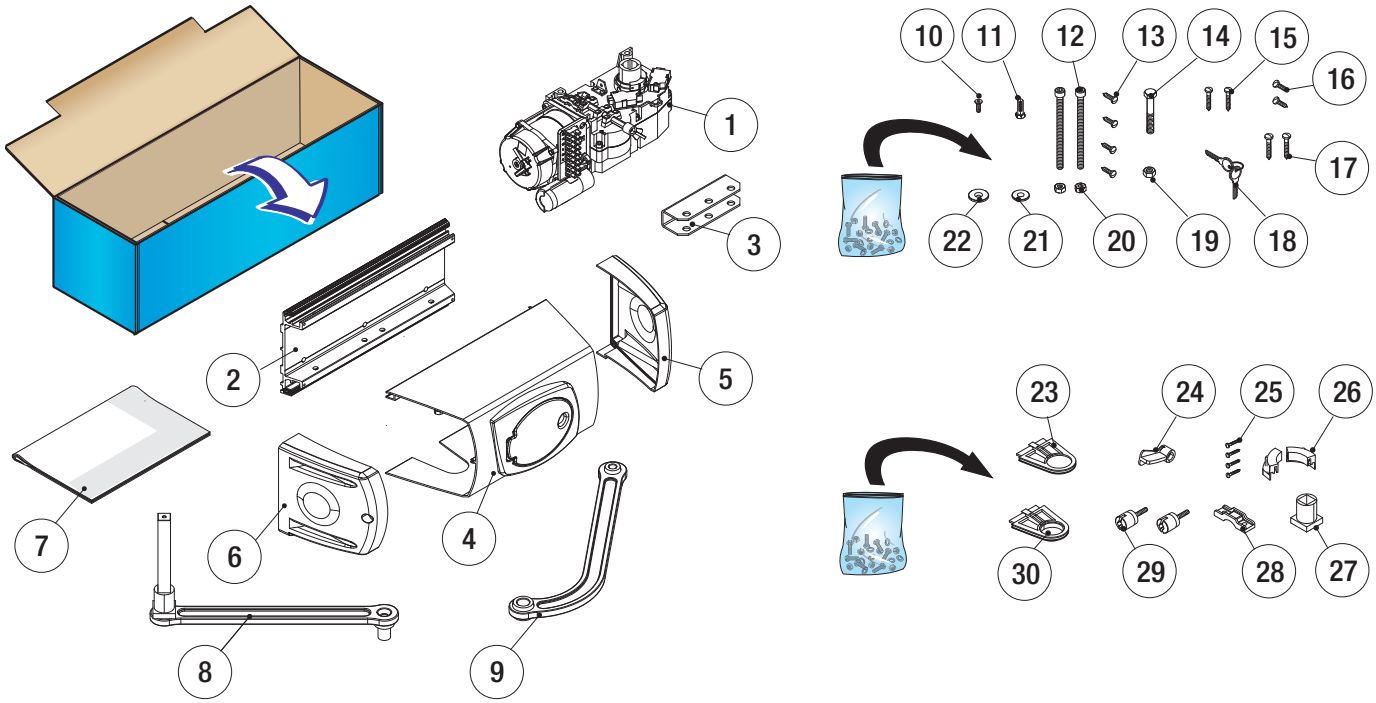

Manual **FA01177-EN** - 05/2018 - © CAME S.p.A. - The contents of this manual may change, at any time, and without notice. - Translated original instructions

Technical data

Type	FE40230	FE40230V
Protection rating (IP)	44	44
Power supply (V - 50/60 Hz)	230 AC	230 AC
Motor power supply (V - 50/60 Hz)	230 AC	230 AC
Power draw (A)	1.2 max.	1.3 max.
Power (W)	140	150
Torque (Nm)	540 max.	320 max.
Opening time to 90° (sec)	34	18
Duty cycle	30%	30%
Operating temperature (°C)	-20 - +55	-20 - +55
Motor thermal protection (°C)	150	150
Insulation class	I	I
Weight (kg)	13,7	13,7

Description of the components

1. Pillar bracket
2. End run
3. Gearmotor
4. Side panels
5. Cover
6. Side covers
7. Transmission arm
8. Driven arm
9. Gate bracket
10. Release handle
11. OPTIONALstraighttelescopicarm(FERNI-BSX / FERNI-BDX)

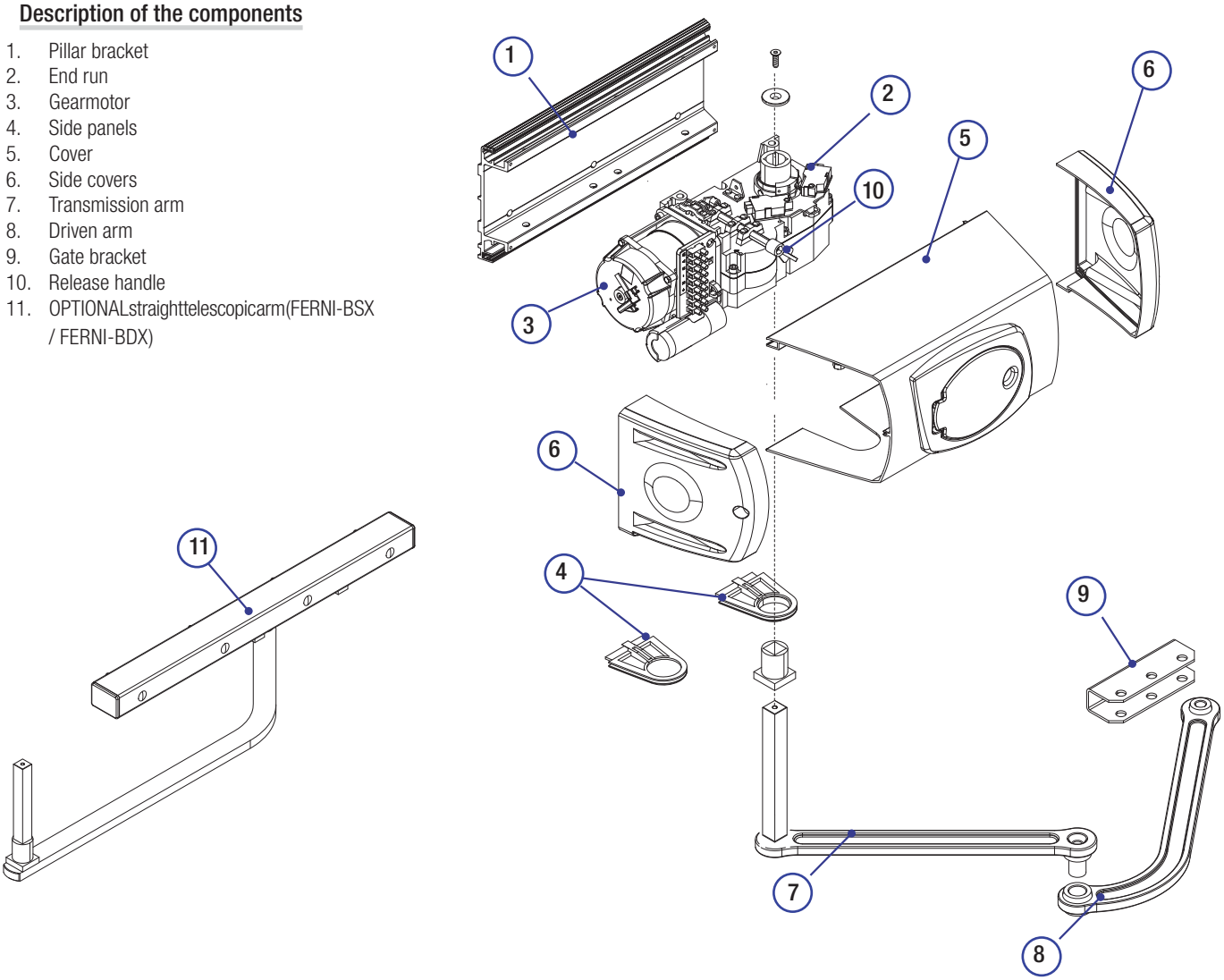

Manual **FA01177-EN** - 05/2018 - © CAME S.p.A. - The contents of this manual may change, at any time, and without notice. - Translated original instructions

Dimensions (mm)

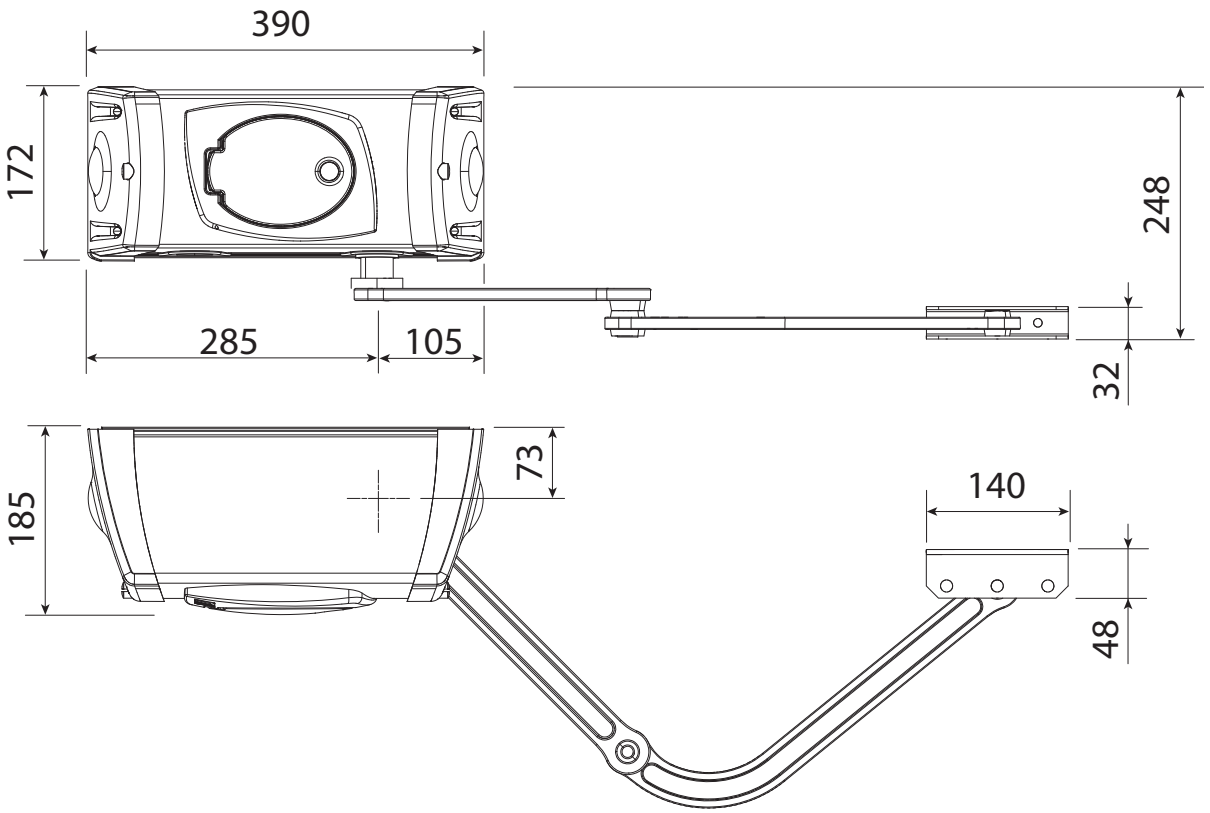

Example of a system

1. Gearmotor
2. Control panel
3. Junction box
4. Antenna
5. Flashing light
6. Selector
7. Photocells
8. Inspection chamber
9. Electric lock
10. Mechanical stops
11. Photocell column

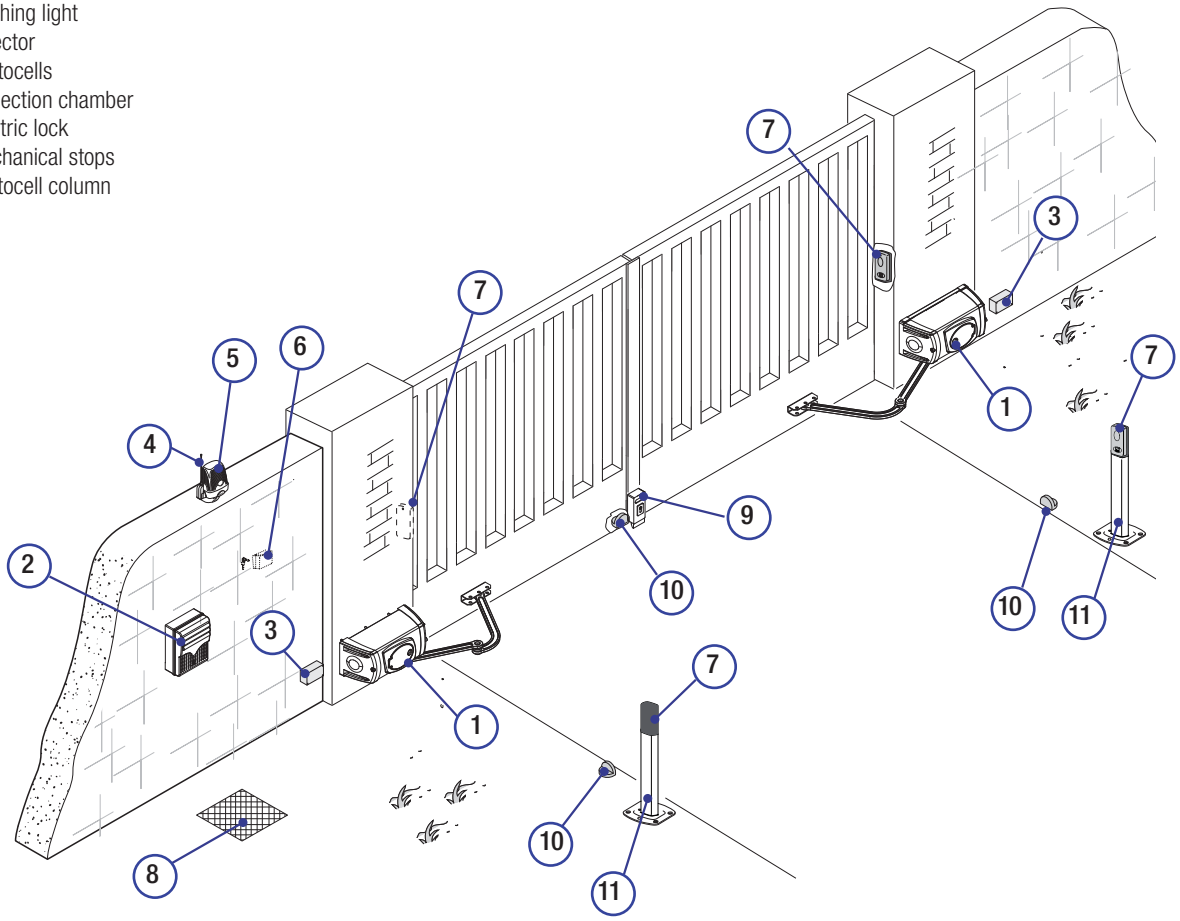

Manual **FA01177-EN** - 05/2018 - © CAME S.p.A. - The contents of this manual may change, at any time, and without notice. - Translated original instructions

GENERAL INSTALLATION INSTRUCTIONS

⚠ Installation must be carried out by qualified and experienced personnel in compliance with applicable regulations.

Preliminary checks

⚠ Before starting installation:

- Provide a suitable single-pole disconnection device, with a maximum of 3 mm between the contacts, to disconnect the power supply ;
- Prepare suitable piping and ducts for routing the electrical cables, ensuring protection against mechanical damage ;
- ⏚ Make sure that any connections within the container (made to ensure the continuity of the protection circuit) are fitted with additional insulation compared to the other internal conductor parts;
- Make sure the gate structure is sturdy enough, that the hinges are in proper working order and that there is no friction between the moving and fixed parts;
- Make sure there are opening and closing mechanical stops.

Tools and materials

Make sure you have all the tools and materials you will need for the installation at hand to work in total safety and compliance with current standards and regulations. The figure shows some examples of installer's tools.

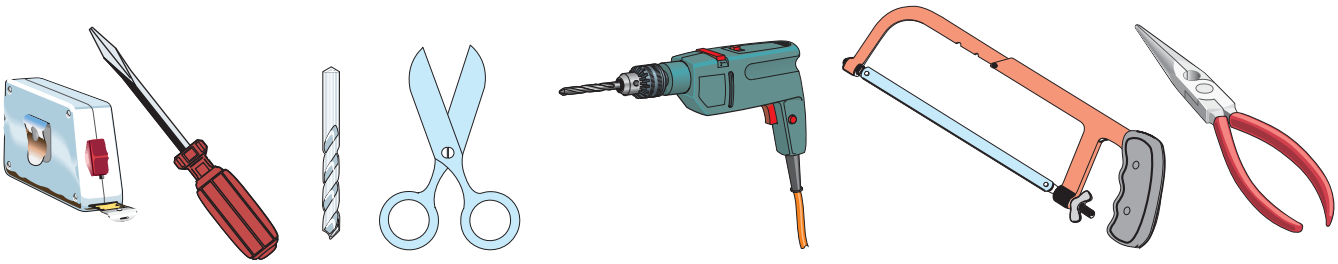

Types of cables and minimum thicknesses

Connection	Cable type	Cable length 1 < 10 m	Cable length 10 < 20 m	Cable length 20 < 30 m
230 VAC board power supply	FROR CEI 20-22 IEC EN 50267-2-1	3G x 1.5 mm^2	3G x 1.5 mm^2	3G x 2.5 mm^2
230 VAC motor power supply		4G x 1.5 mm^2	4G x 1.5 mm^2	4G x 2.5 mm^2
Flashing light		2 x 1.5 mm^2	2 x 1.5 mm^2	2 x 1.5 mm^2
Photocell transmitters		2 x 0.5 mm^2	2 x 0.5 mm^2	2 x 0.5 mm^2
Photocell receivers		4 x 0.5 mm^2	4 x 0.5 mm^2	4 x 0.5 mm^2
Control and safety devices		2 x 0.5 mm^2	2 x 0.5 mm^2	2 x 0.5 mm^2
Antenna	RG58	max. 10 m		
Encoder	TWISTED	max. 30 m		

N.B.: If the cables differ in length compared to what is shown in the table, the cable cross-section is determined according to the actual current draw of the devices connected and according to the provisions of the IEC EN 60204-1 standard.
For connections that require several, sequential loads, the sizes given on the table must be re-evaluated based on actual power draw and distances. When connecting products that are not specified in this manual, please refer to the documentation provided with said products.

Manual **FA01177-EN** - 05/2018 - © CAME S.p.A. - The contents of this manual may change, at any time, and without notice. - Translated original instructions

INSTALLATION

⚠ The following illustrations are only examples, given that the space for securing the operator and accessories varies depending on the overall dimensions. The installation technician is responsible for choosing the most suitable solution.

Installing corrugated tubes

Set up corrugated tubes for the connections coming from the junction box.
N.B. the number of tubes depends on the type of system installed and any accessories.

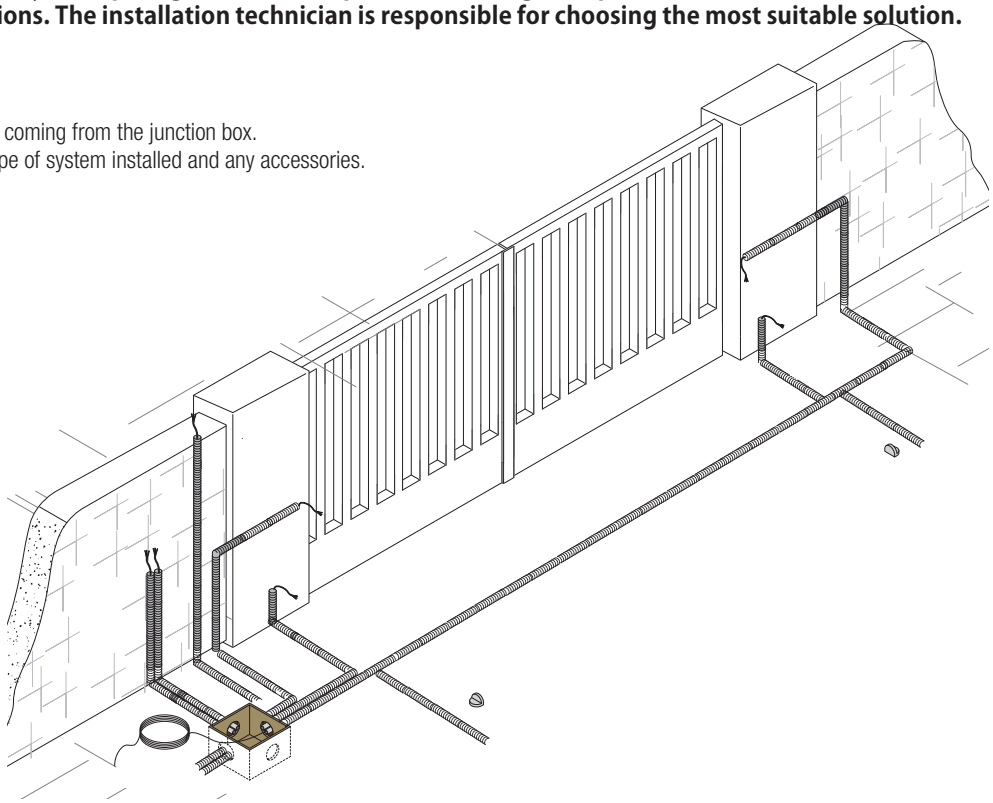

Securing the brackets

N.B. the drawings refer to installation of the left-hand gearmotor. The installation of the right-hand gearmotor is symmetrical.
Determine the fixing point for the gate bracket and calculate the fixing point of the pillar bracket, respecting the values shown in the drawings and table.

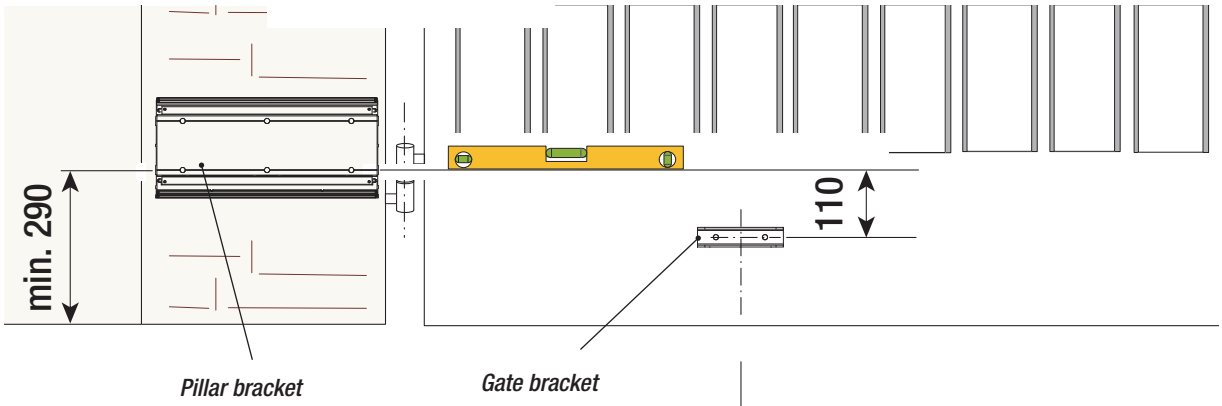

Application size (mm)

Leaf opening (°)	A	B
90°	150	0 - 380
120°	200	0

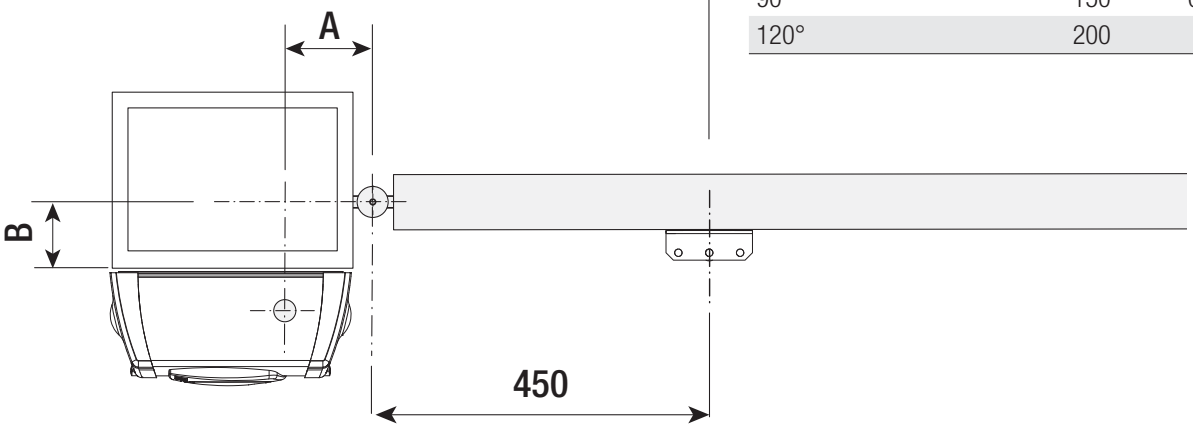

Manual **FA0177-EN** - 05/2018 - © CAME S.p.A. - The contents of this manual may change, at any time, and without notice. - Translated original instructions

Mark the fixing points on the pillar bracket and gate bracket, respecting the values shown in the drawing.

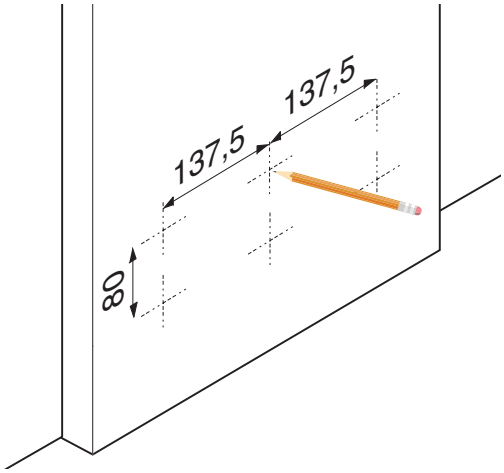

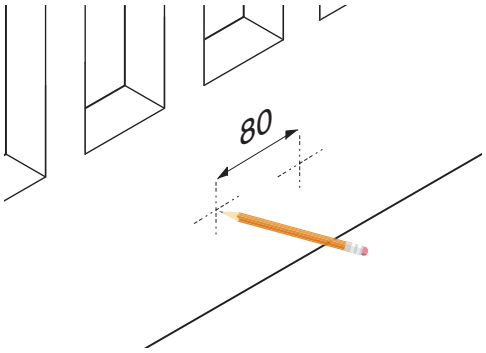

Drill the marked points.

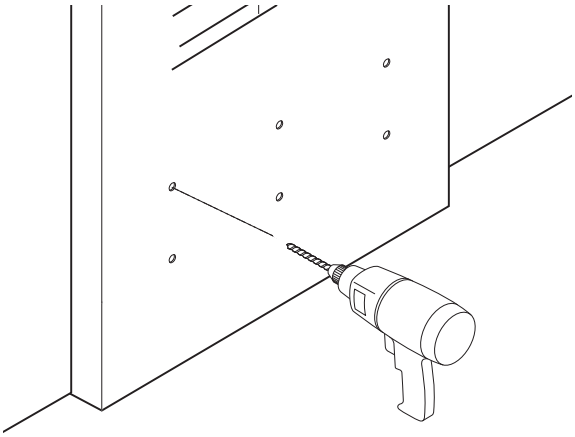

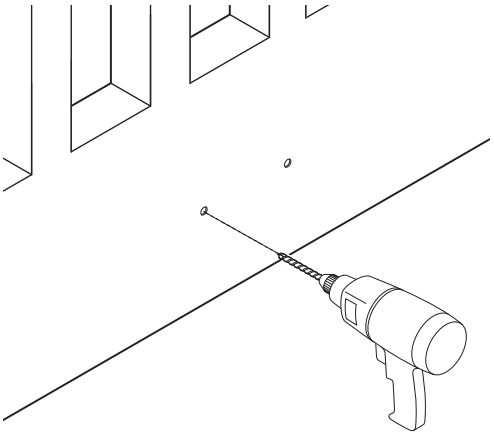

Insert the anchors or use suitable inserts for holding the brackets.
N.B. the illustrations are mere examples, it is up to the installer to choose the most suitable solution depending on leaf type and thickness.

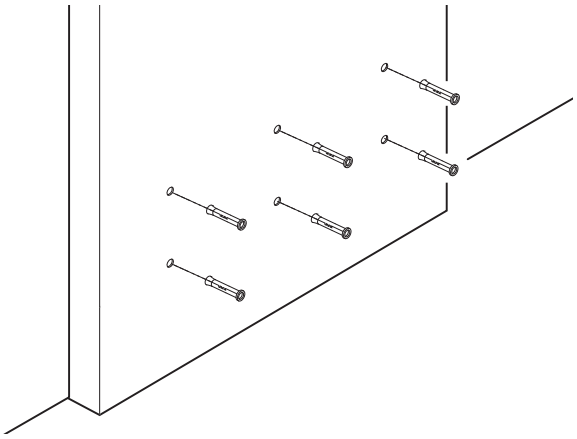

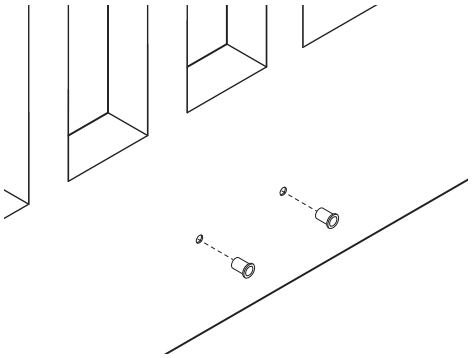

Manual **FA01177-EN** - 05/2018 - © CAME S.p.A. - The contents of this manual may change, at any time, and without notice. - Translated original instructions

Position and secure the brackets as shown in the drawing.

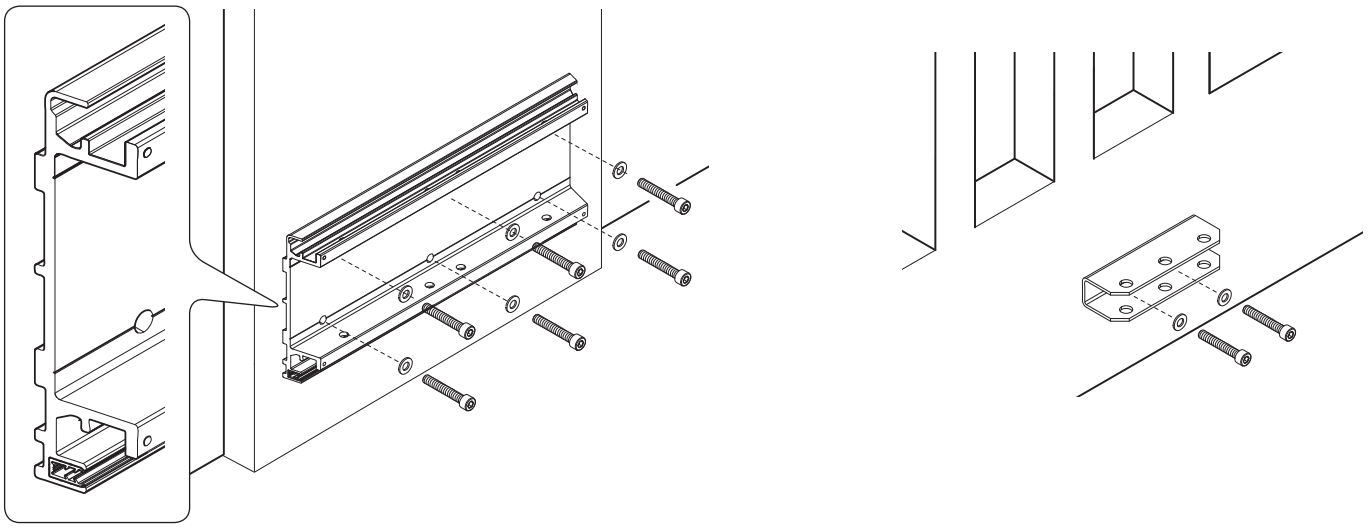

Securing the gearmotor

Insert the side panels in the pillar bracket slots. One is used for passing through the cables, the other for passing through the gearmotor arm.
N.B. before inserting the panel for passing through the cables, assemble a cable gland suitable forthe cables to be used.

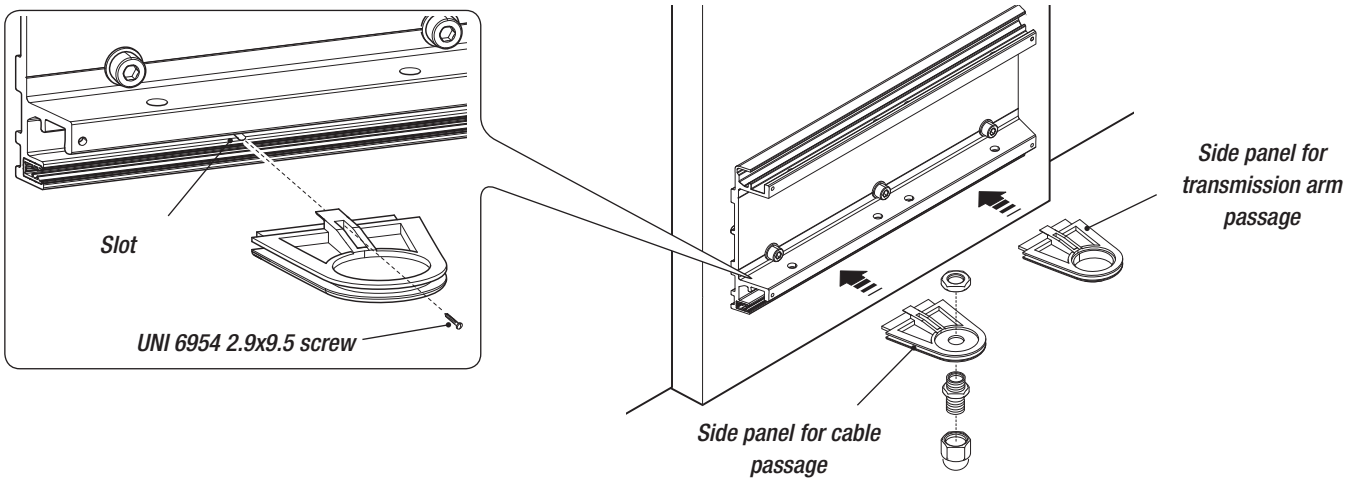

Insert the gearmotor into the bracket and secure it with screws and nuts.

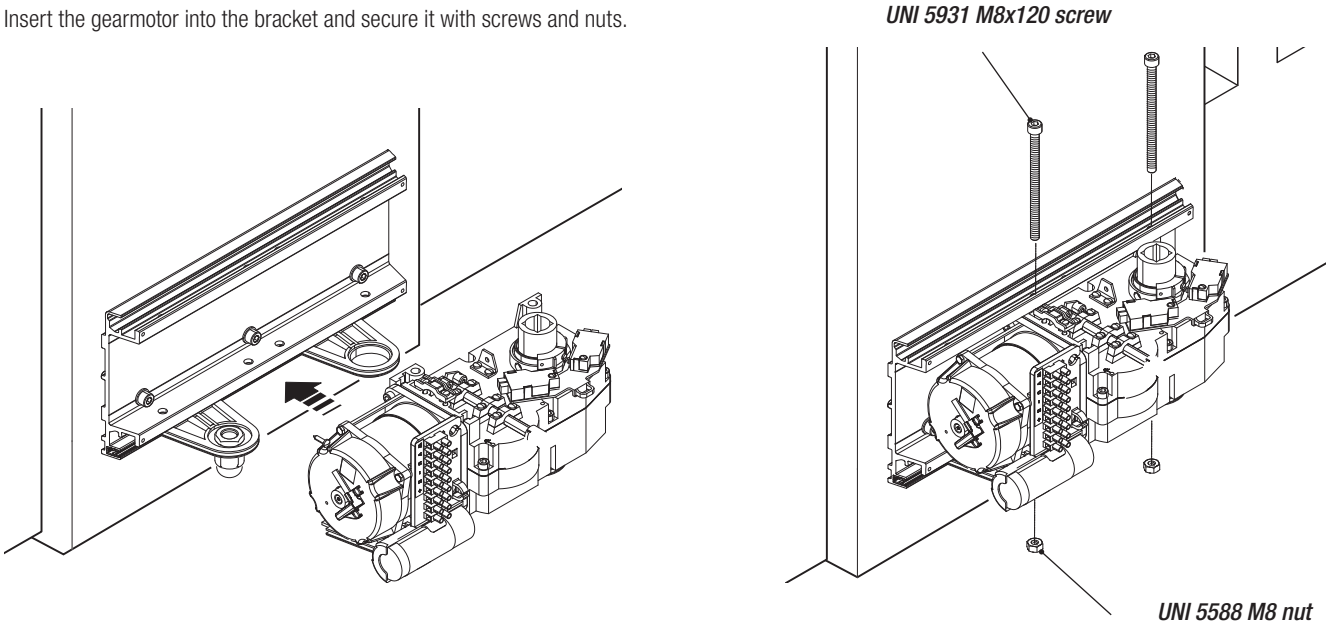

Manual **FA01177-EN** - 05/2018 - © CAME S.p.A. - The contents of this manual may change, at any time, and without notice. - Translated original instructions

Securing the transmission arms

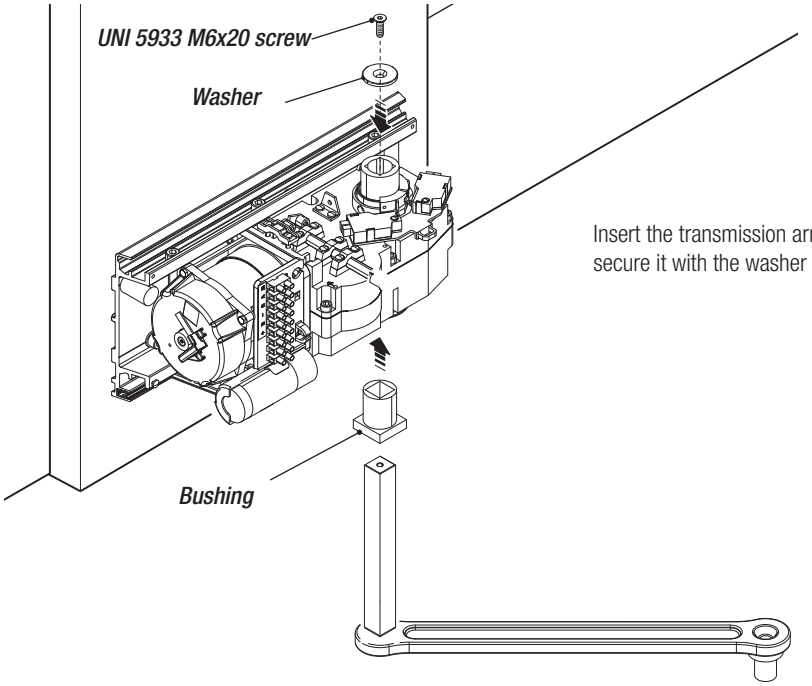

Insert the transmission arm with the bushing in the motor shaft and secure it with the washer and screw.

Secure the drive arm to the transmission arm using the screw and washer.

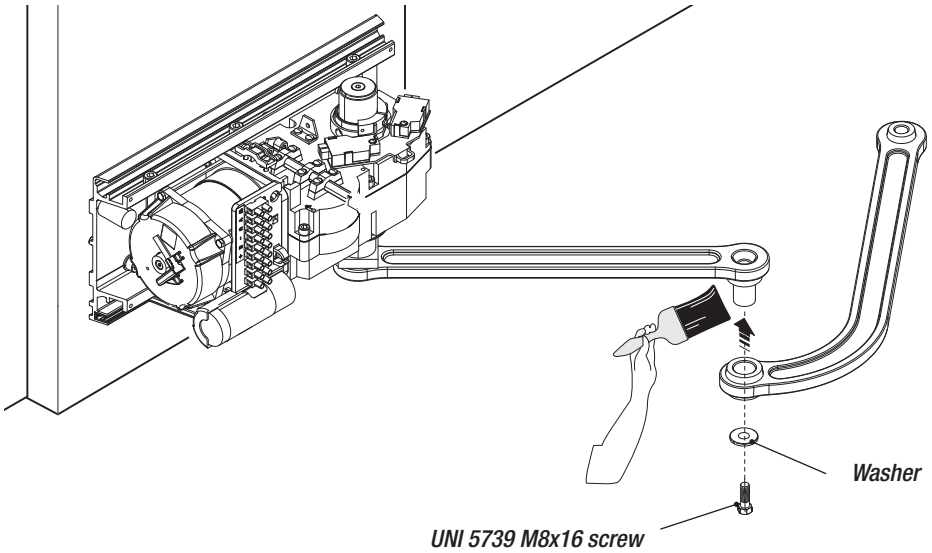

Release the gearmotor (see figure) and secure the drive arm to the gate bracket with the screw and nut.

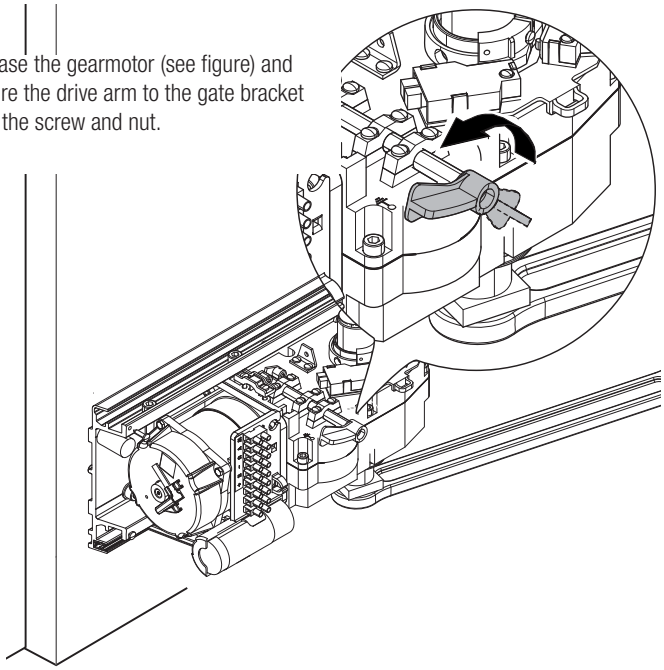

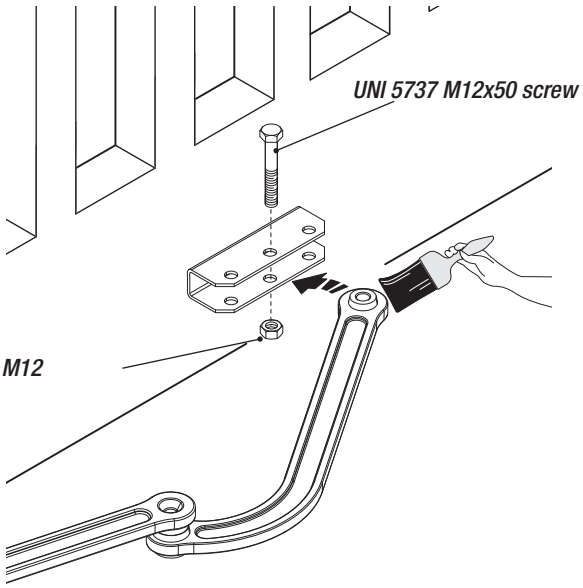

Manual **FA01177-EN** - 05/2018 - © CAME S.p.A. - The contents of this manual may change, at any time, and without notice. - Translated original instructions

⚠ **Caution: if there are no end stops, end runs must be fitted.**

Securing the end runs and determining the end run points

For left-hand gearmotor.
Secure the end run to the gearmotor and insert the cams on the guide.

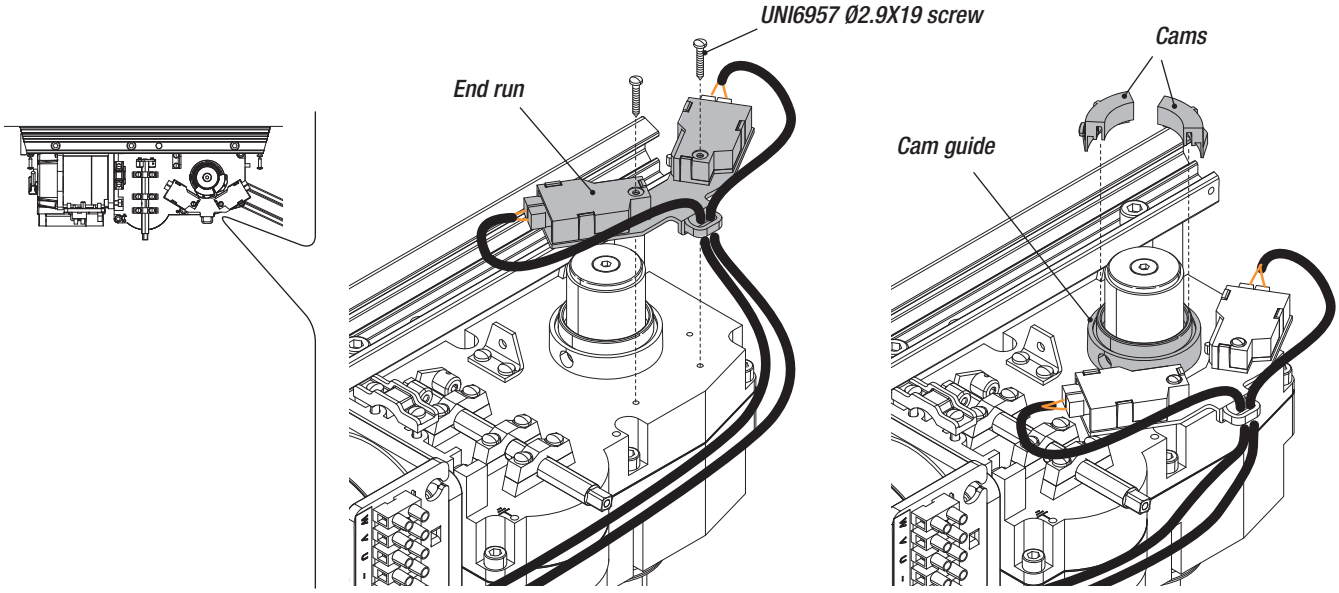

Close the leaf fully and turn the cam anti-clockwise until the closing microswitch is activated. Secure the cam with the screws.

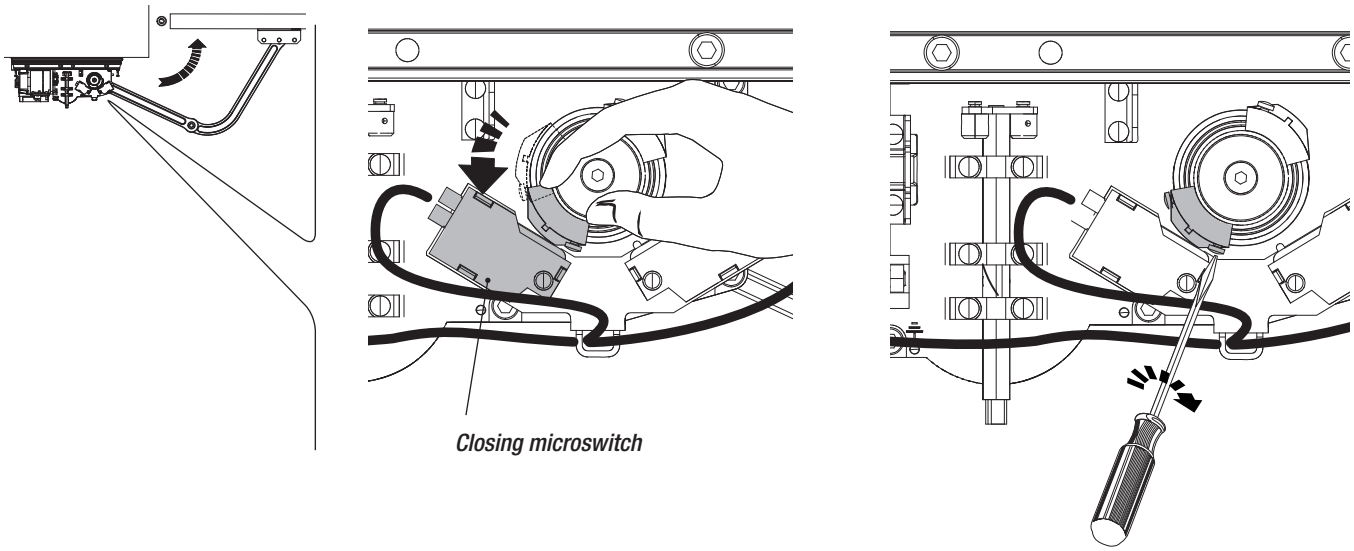

Fully open the leaf and turn the other cam clockwise until the opening microswitch is activated. Secure the cam with the screws.

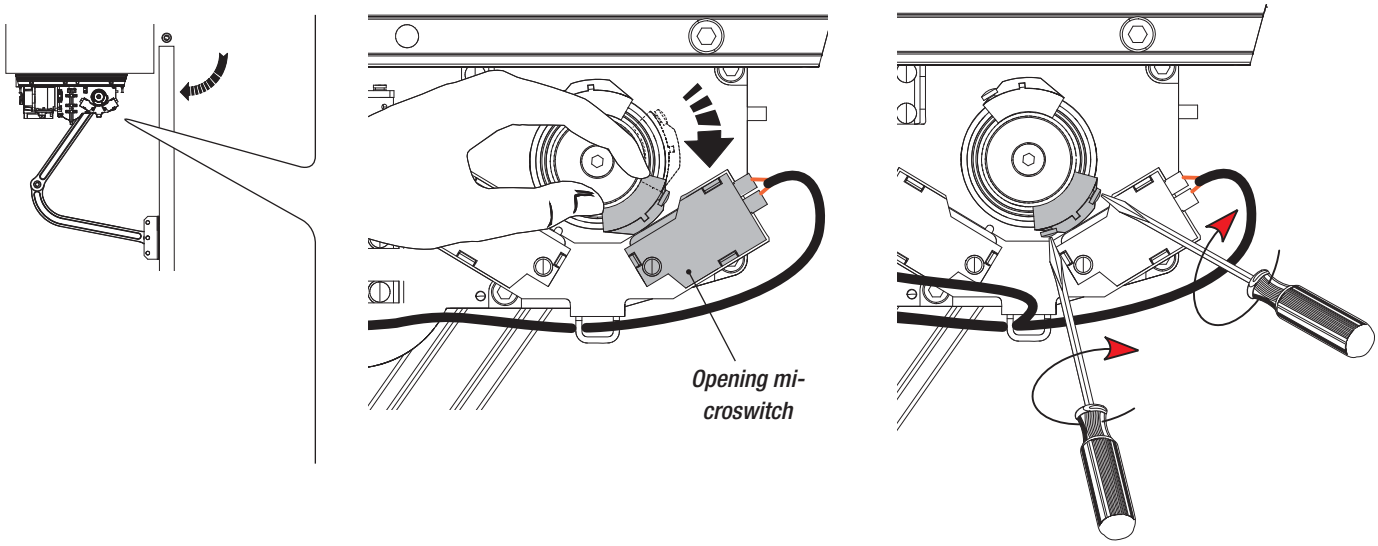

Manual **FA01177-EN** - 05/2018 - © CAME S.p.A. - The contents of this manual may change, at any time, and without notice. - Translated original instructions

For right-hand gearmotor.
Secure the end run to the gearmotor, invert the microswitch cables and insert the cams on the guide.

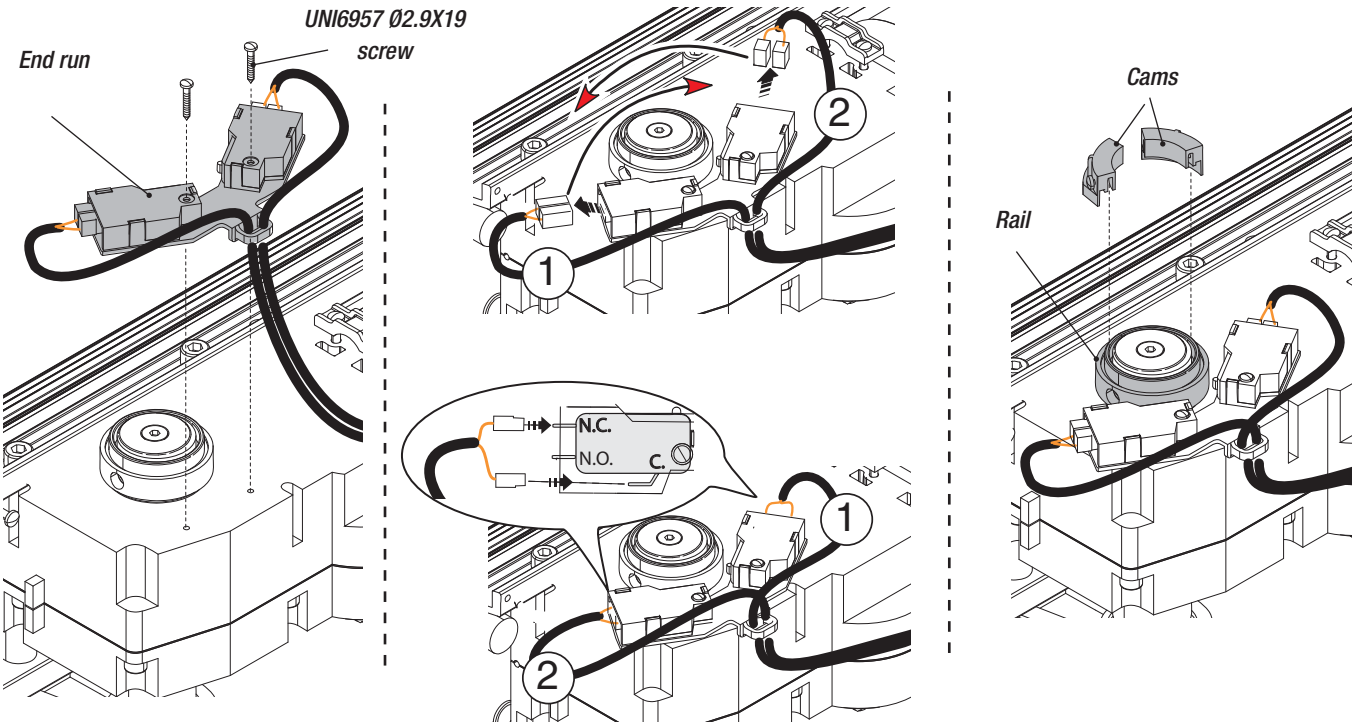

Close the leaf fully and turn the cam clockwise until the closing microswitch is activated. Secure the cam with the screws.

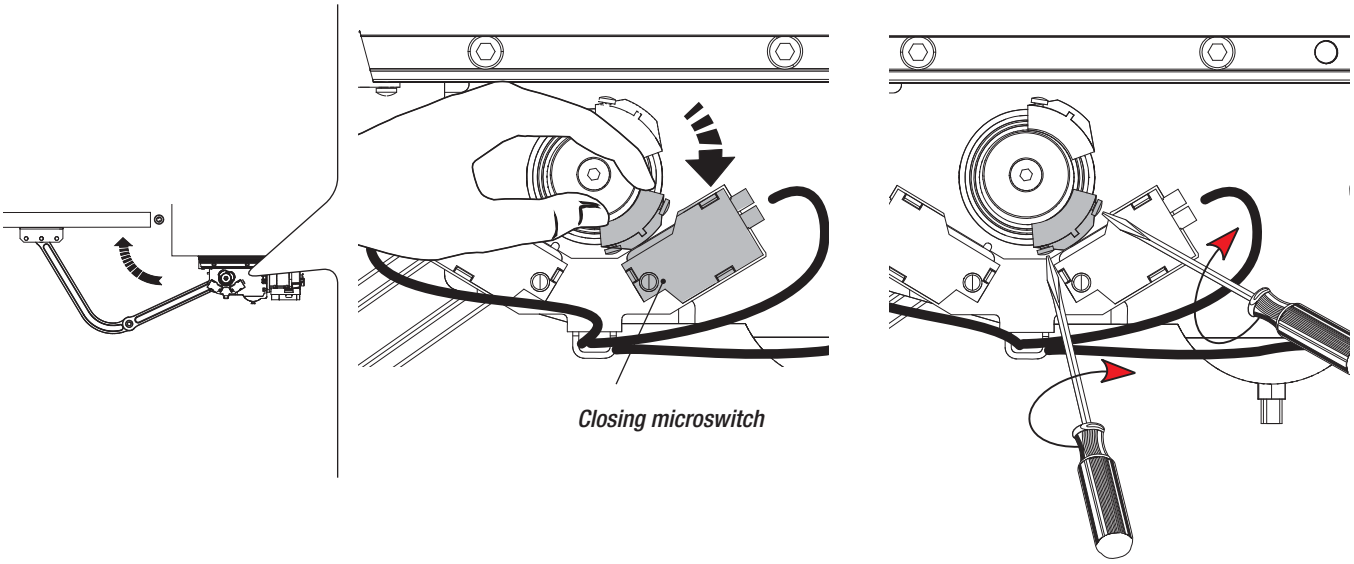

Fully open the leaf and turn the other cam anti-clockwise until the opening microswitch is activated. Secure the cam with the screws.

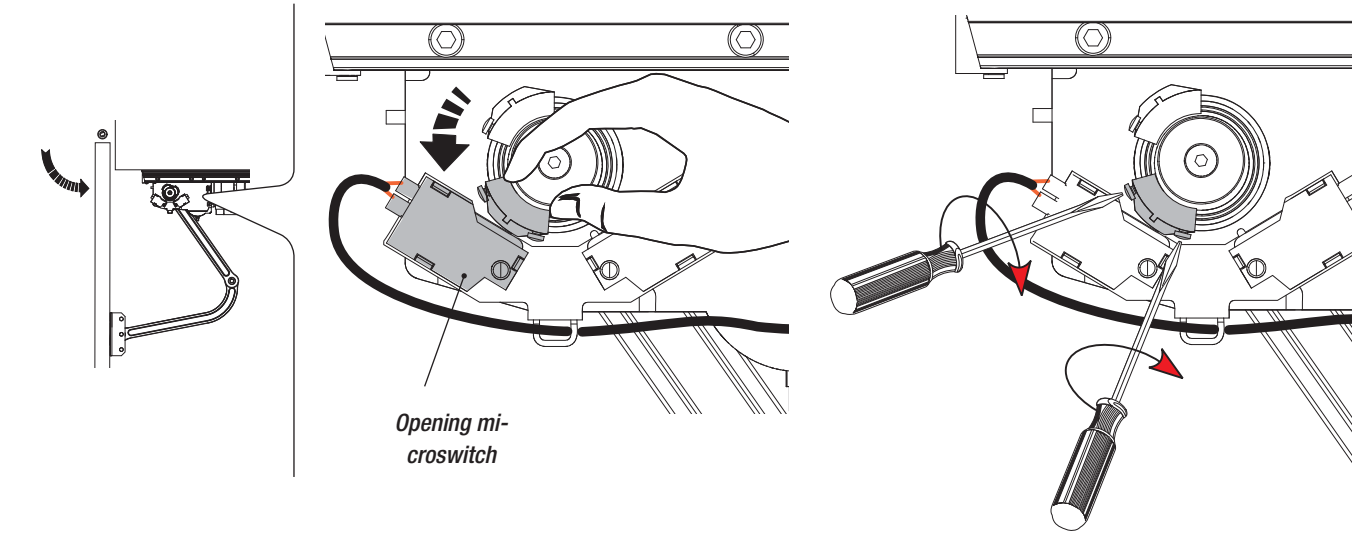

Manual **FA01177-EN** - 05/2018 - © CAME S.p.A. - The contents of this manual may change, at any time, and without notice. - Translated original instructions

ELECTRICAL CONNECTIONS

For electrical connection operations, use the chamber and the junction boxes.
For further information regarding functions and adjustment, refer to the technical documentation for the control panel.

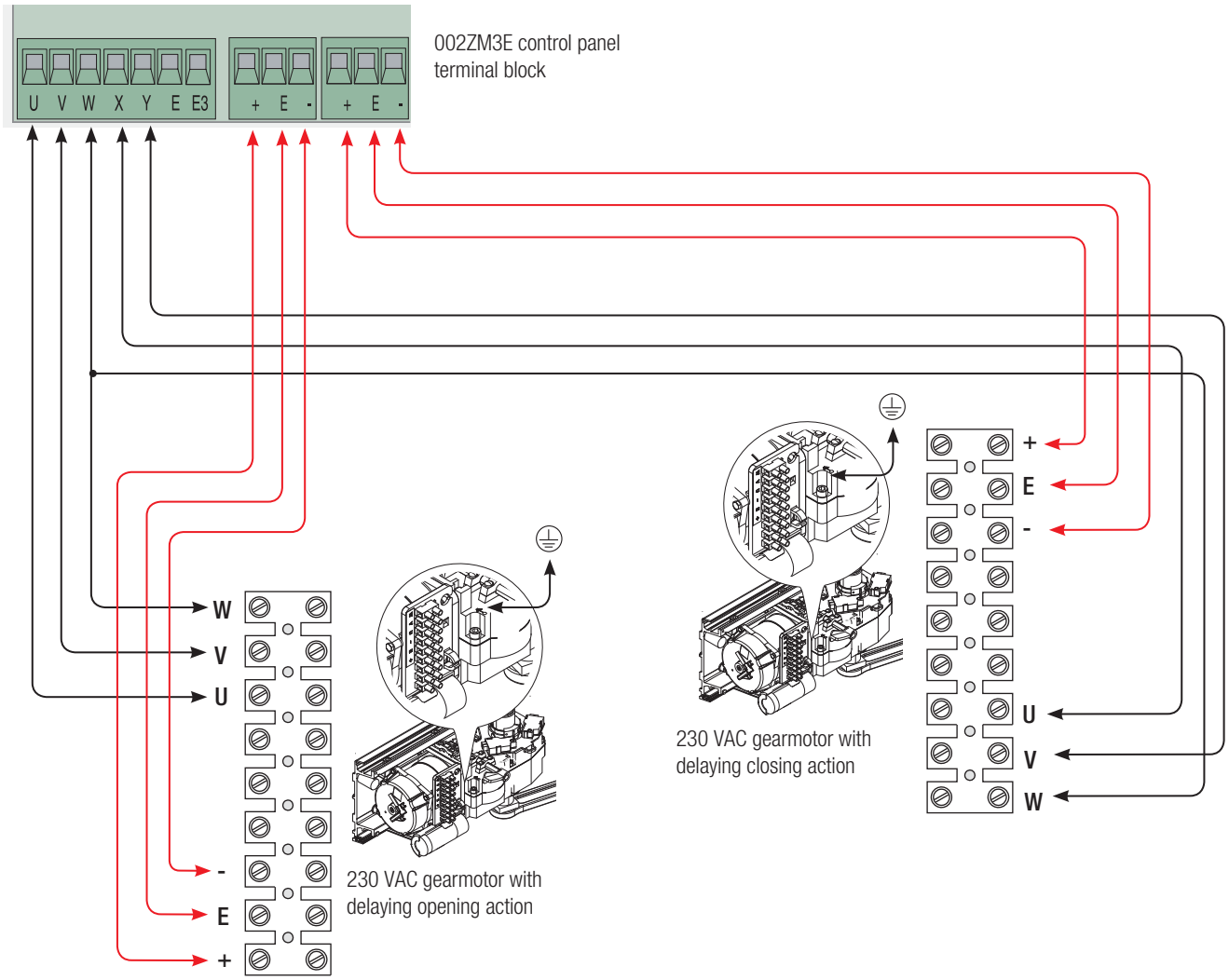

FINAL OPERATIONS

Securing the covers

When the connections and adjustments have been made, drill the cover at the point marked at the top for the left-hand gearmotor and at the bottom for the right-hand gearmotor.

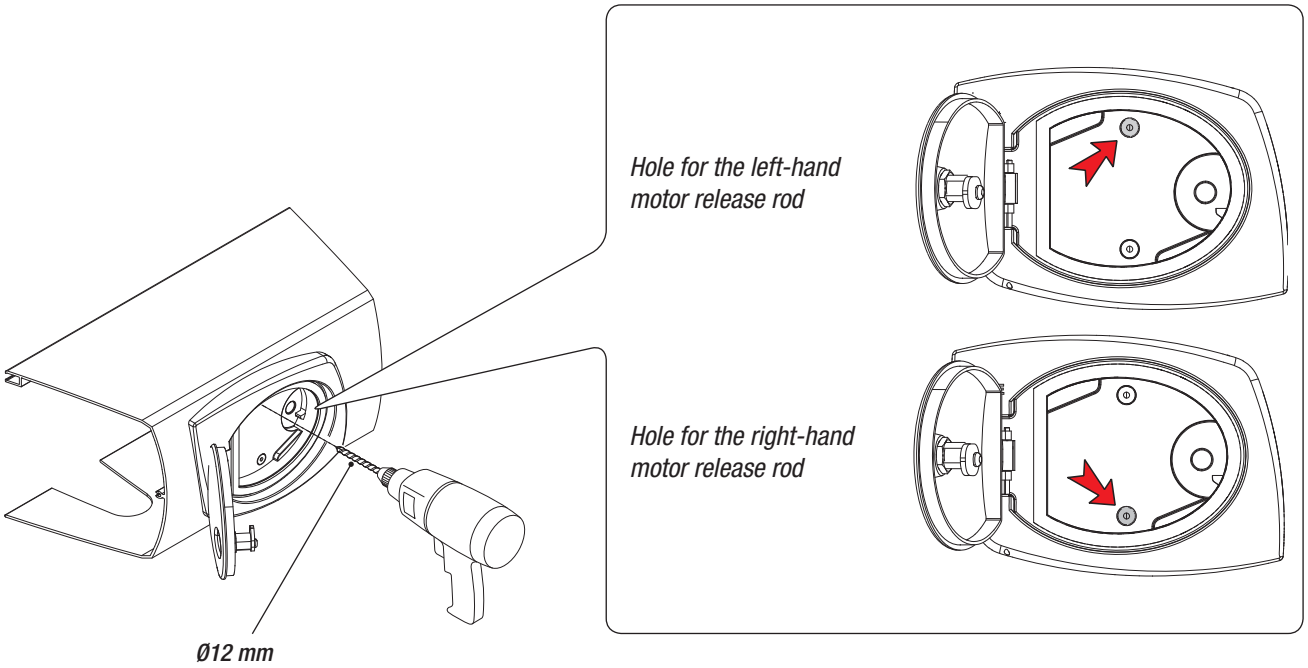

Manual **FA01177-EN** - 05/2018 - © CAME S.p.A. - The contents of this manual may change, at any time, and without notice. - Translated original instructions

Connect the earth wire to the motor. Put on the cover.

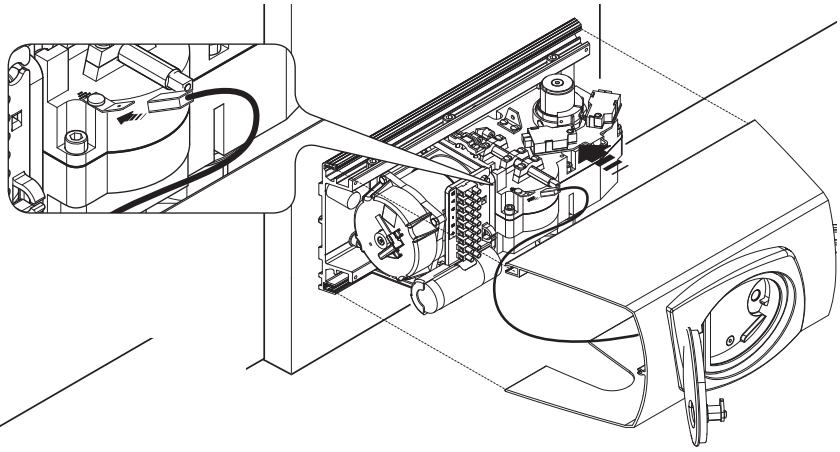

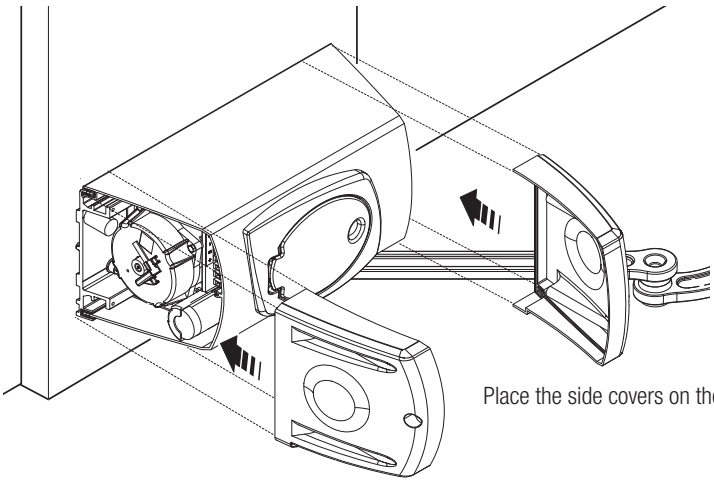

Place the side covers on the sides of the middle cover.

Secure the side covers on the pillar bracket using two screws on each side and one on the top.

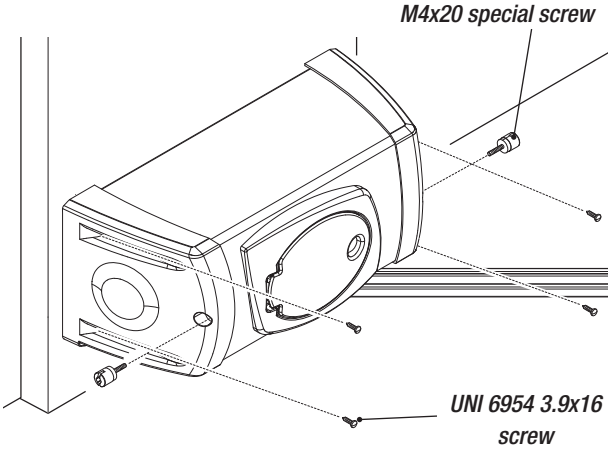

Securing the release knobs

Insert the knob onto the release rod and secure it using the washer and the screw.

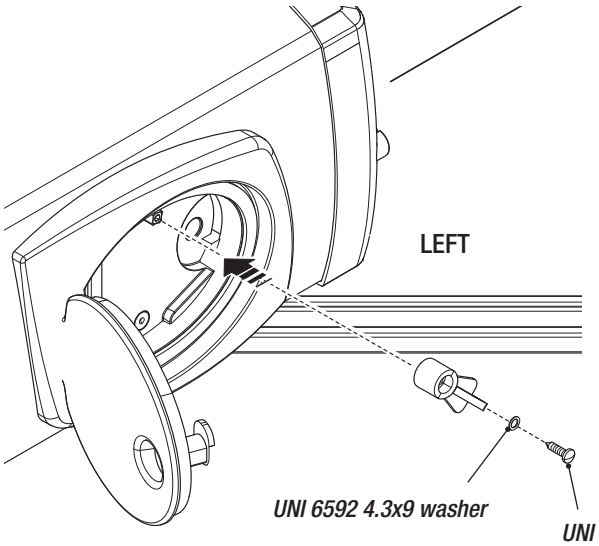

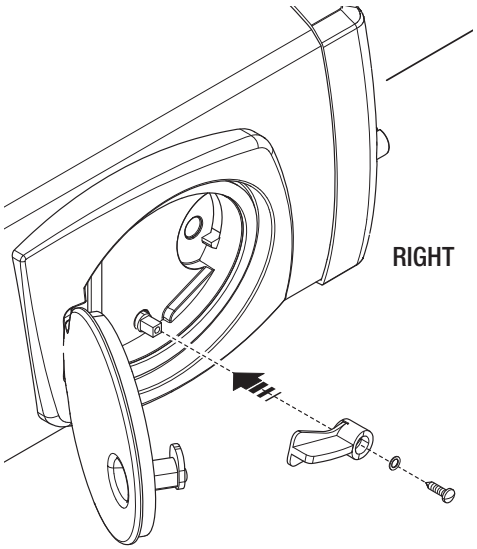

Manual **FA01177-EN** - 05/2018 - © CAME S.p.A. - The contents of this manual may change, at any time, and without notice. - Translated original instructions

Releasing the gearmotor

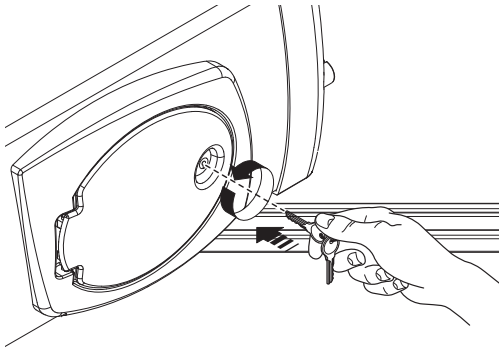

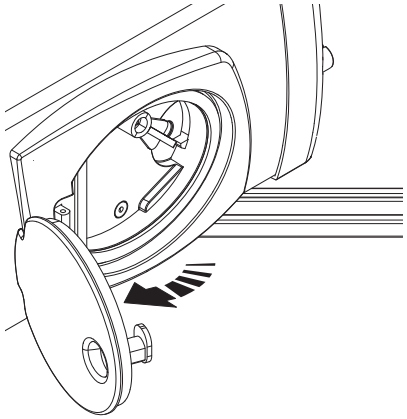

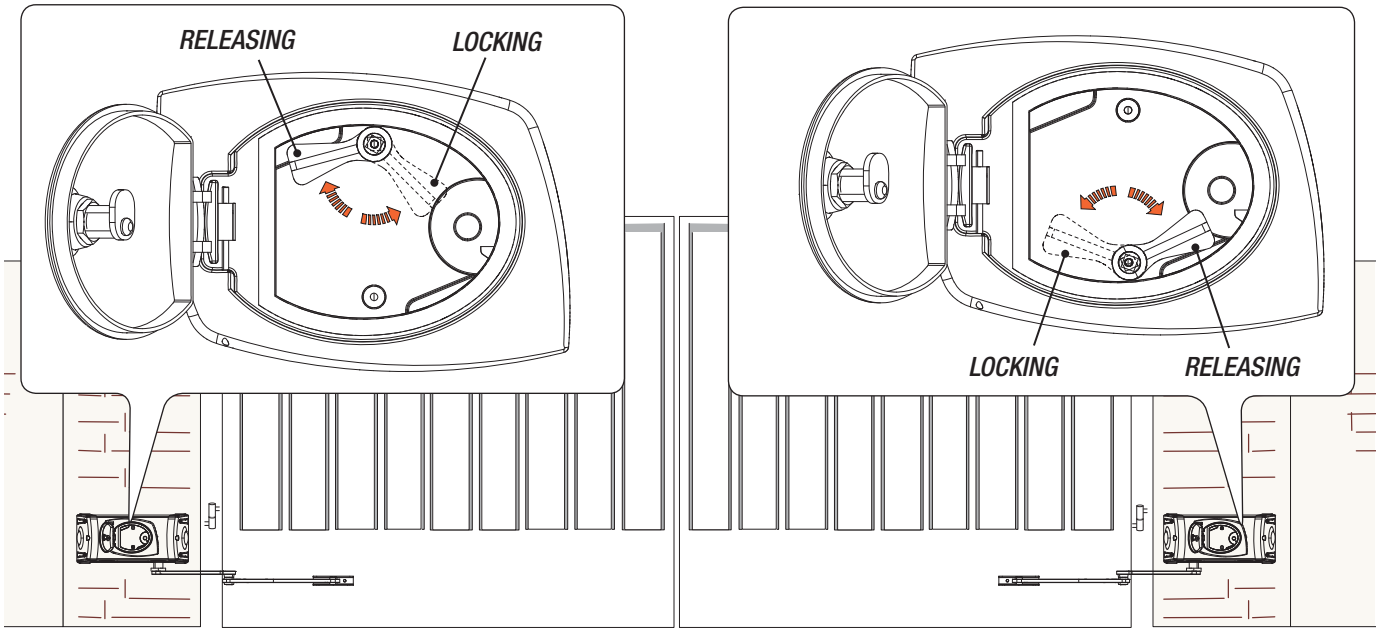

INSTALLING AND CONNECTIONS FOR OUTWARD-OPENINGS

Below are the only procedures that vary compared to standard installations:

Securing the brackets

N.B. the drawings refer to installation of the left-hand gearmotor. The installation of the right-hand gearmotor is symmetrical.
Determine the fixing point for the gate bracket and calculate the fixing point of the pillar bracket, respecting the values shown in the drawings and table.

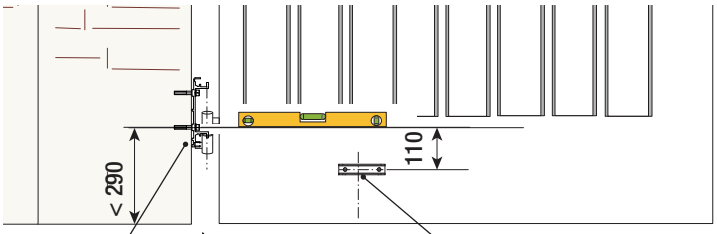

Application size

Leaf opening	A	B
90°	150	0 ÷ 120
120°	150	0 ÷ 60

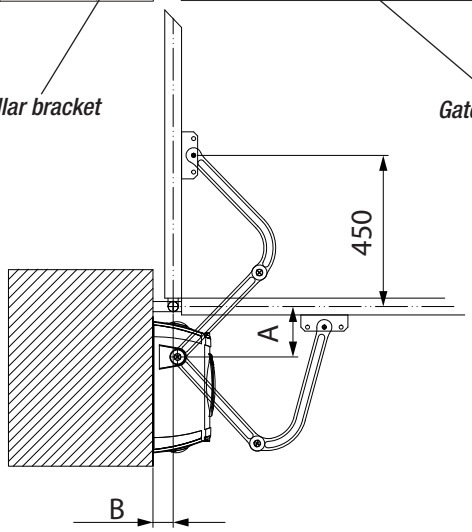

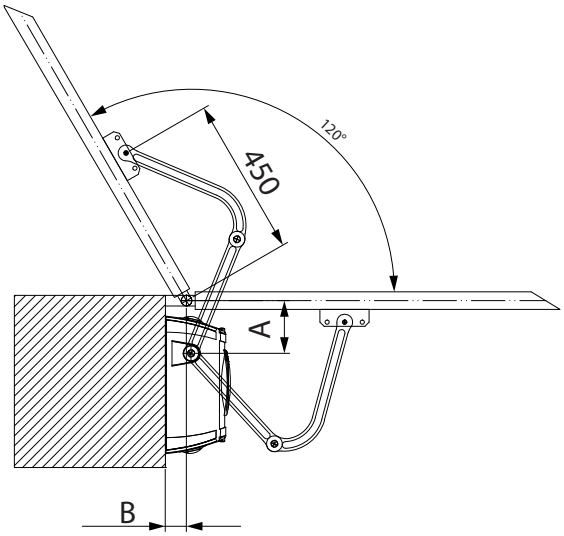

Manual **FA01177-EN** - 05/2018 - © CAME S.p.A. - The contents of this manual may change, at any time, and without notice. - Translated original instructions

⚠ **Caution: if there are no end stops, end runs must be fitted.**

Securing the end runs and determining the end run points

For left-hand gearmotor.
Secure the end run to the gearmotor and insert the cams on the guide.

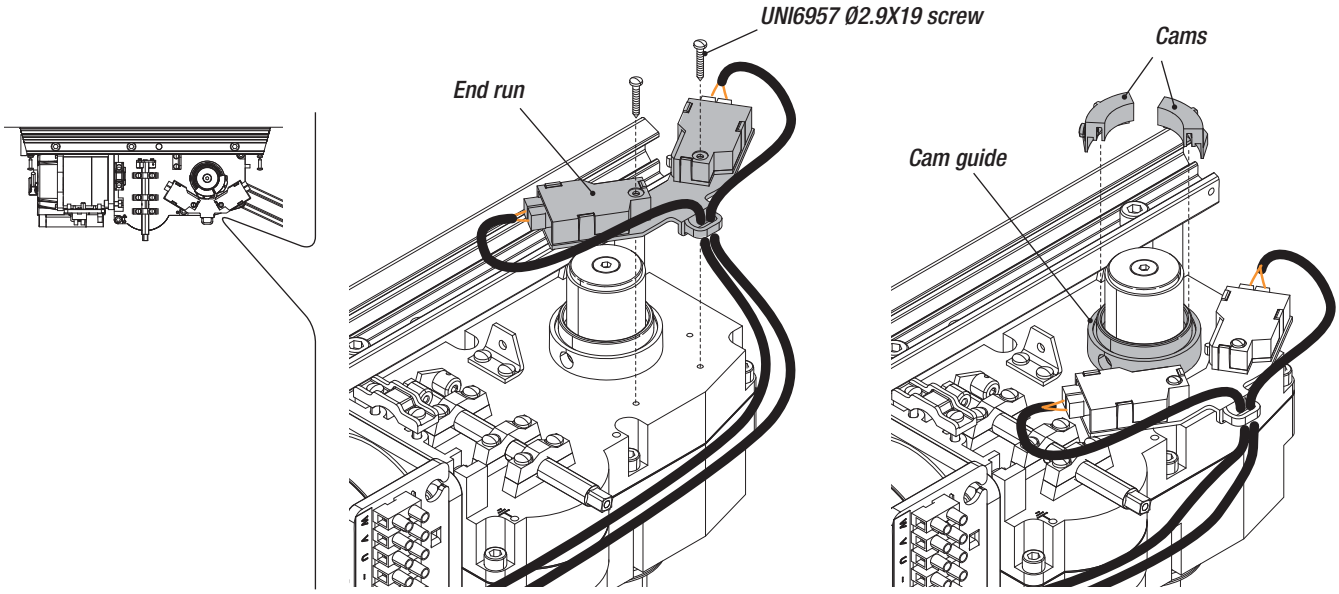

Open the leaf fully and turn the cam anti-clockwise until the opening microswitch is activated. Secure the cam with the screws.

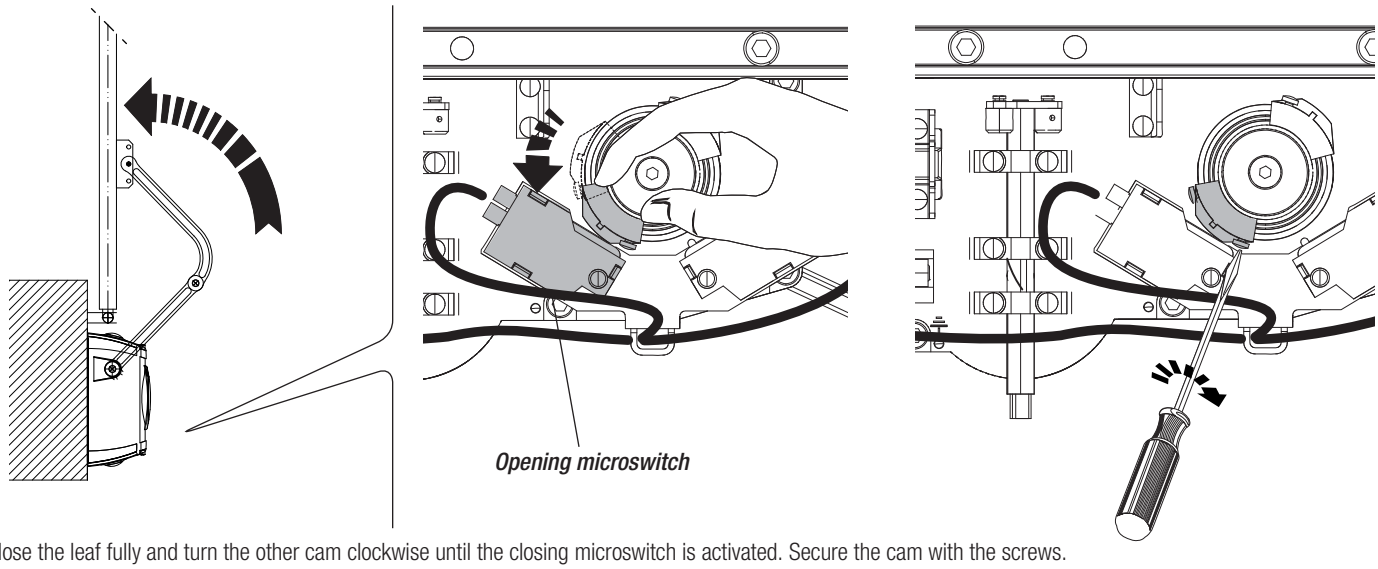

Close the leaf fully and turn the other cam clockwise until the closing microswitch is activated. Secure the cam with the screws.

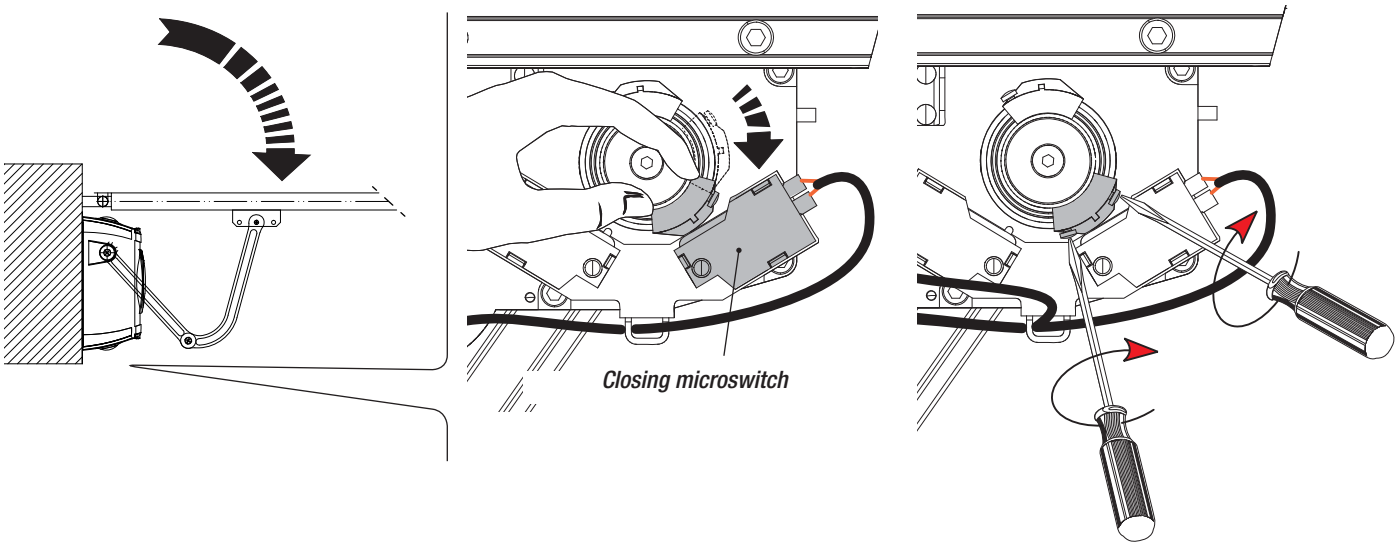

Manual **FA01177-EN** - 05/2018 - © CAME S.p.A. - The contents of this manual may change, at any time, and without notice. - Translated original instructions

For right-hand gearmotor.
Secure the end run to the gearmotor, invert the microswitch cables and insert the cams on the guide.

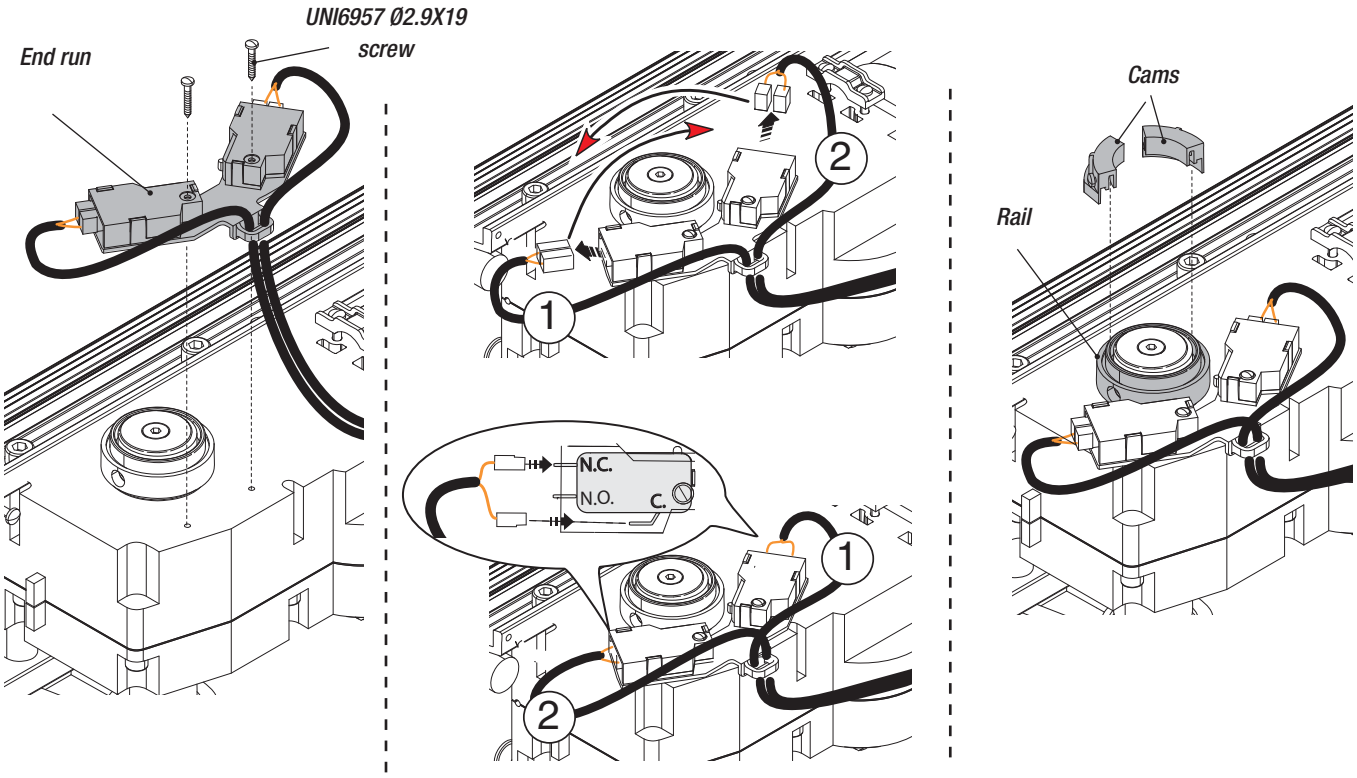

Open the leaf fully and turn the cam clockwise until the opening microswitch is activated. Secure the cam with the screws.

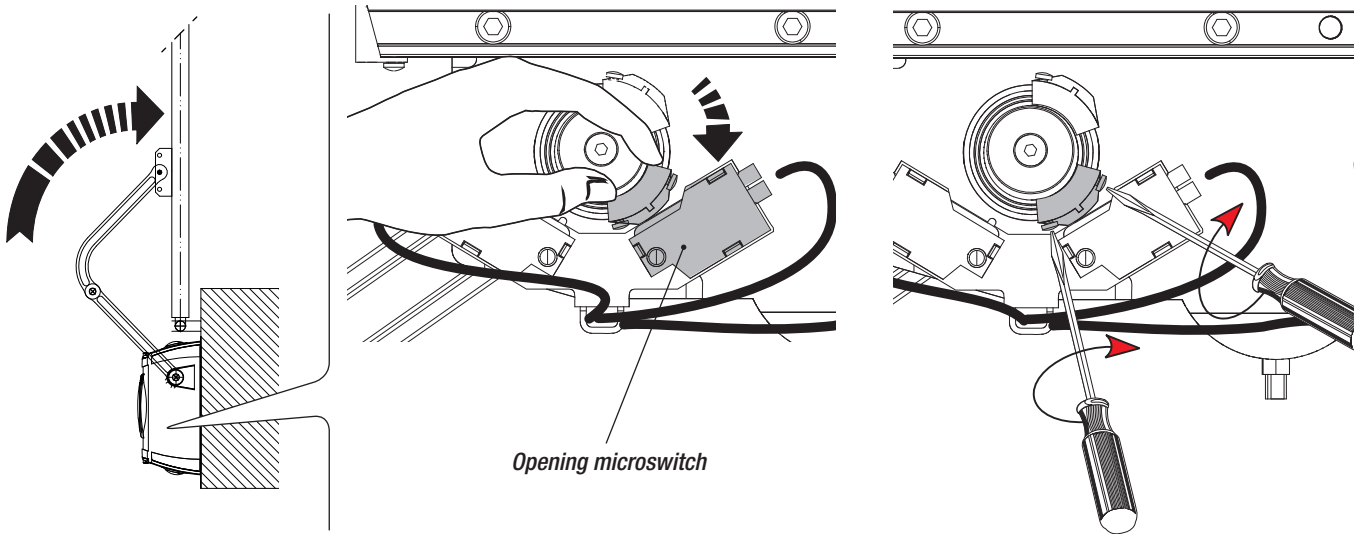

Close the leaf fully and turn the other cam anti-clockwise until the closing microswitch is activated. Secure the cam with the screws.

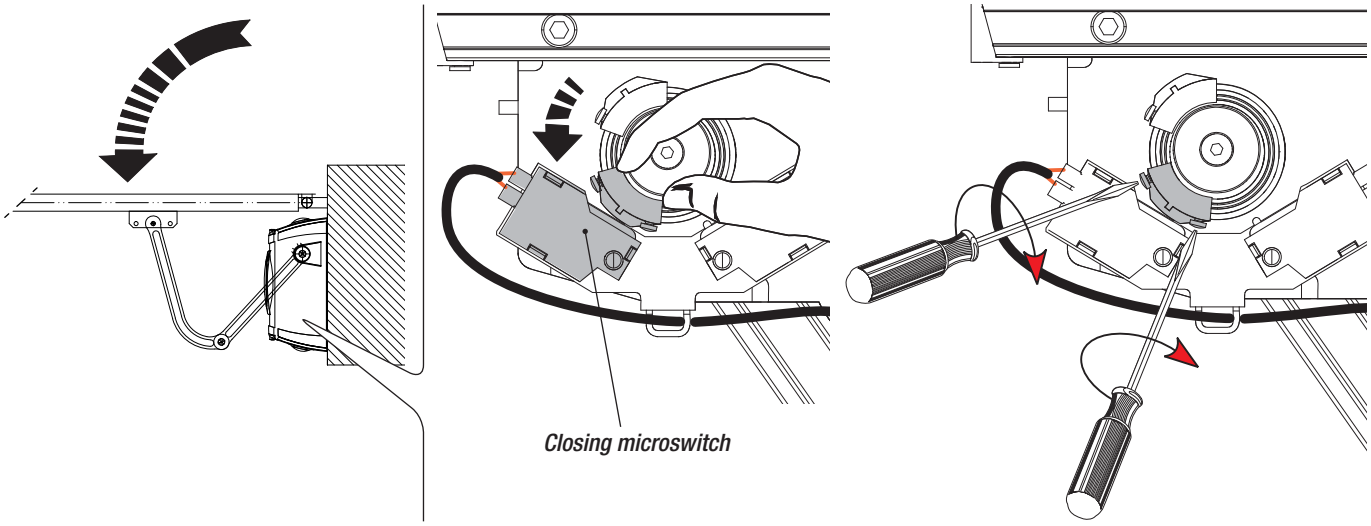

Manual **FA01177-EN** - 05/2018 - © CAME S.p.A. - The contents of this manual may change, at any time, and without notice. - Translated original instructions

Electrical connections

For electrical connection operations, use the chamber and the junction boxes.
For further information regarding functions and adjustment, refer to the technical documentation for the control panel.

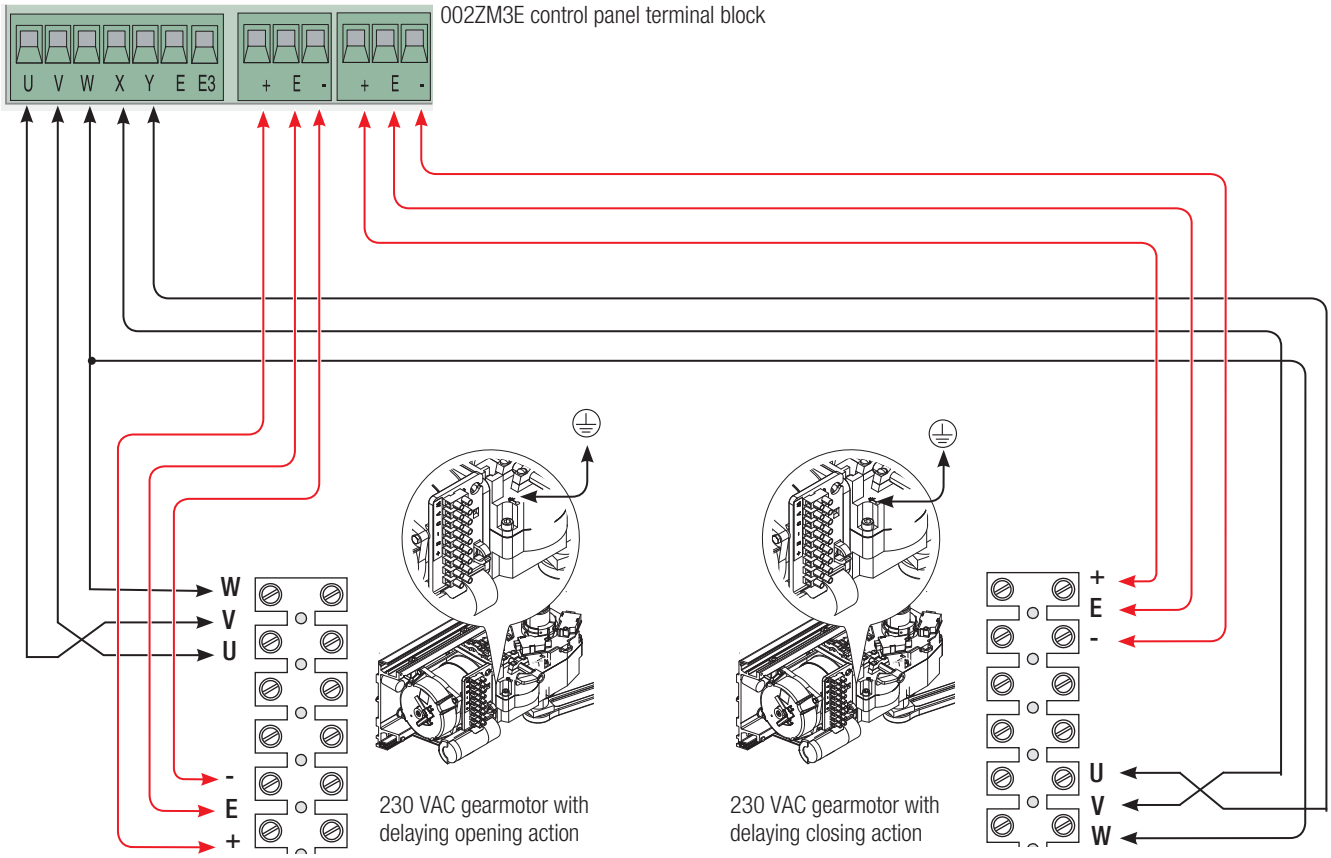

MAINTENANCE

☞Before any maintenance, disconnect power to prevent any possible dangerous situations that can be caused by accidental movement of the operator.

Periodic maintenance

☞ It is advisable to check lubrication periodically and check that the operator fixing screws are tight.
In the event of abnormal vibrations or squeaking, lubricate the joints with grease, as shown in the figure below.
Make sure there is no vegetation within the operating range of the photocells, and that there are no obstacles in the operating range of the gate.

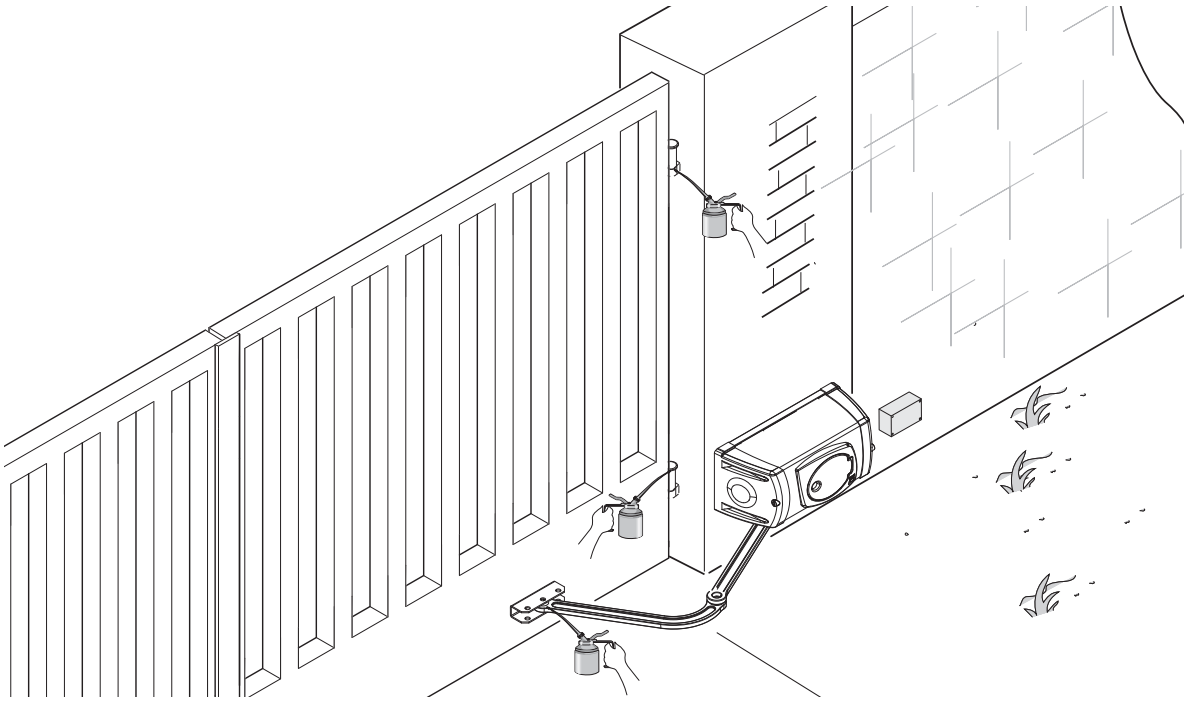

Manual **FA01177-EN** - 05/2018 - © CAME S.p.A. - The contents of this manual may change, at any time, and without notice. - Translated original instructions

Periodic maintenance log to be completed by the user (every six months)

Date	Notes	Signature

Extraordinary maintenance

⚠The table below is used to note any extraordinary maintenance, repairs or improvements carried out by specialist companies.
N.B.: Extraordinary maintenance must be carried out by specialist technicians.

Extraordinary maintenance log

Installation technician stamp	Operator name
	Date of intervention
	Technician signature
	Customer signature
Intervention carried out _____	

Installation technician stamp	Operator name
	Date of intervention
	Technician signature
	Customer signature
Intervention carried out _____	

Installation technician stamp	Operator name
	Date of intervention
	Technician signature
	Customer signature
Intervention carried out _____	

Manual **FA01177-EN** - 05/2018 - © CAME S.p.A. - The contents of this manual may change, at any time, and without notice. - Translated original instructions

Installation technician stamp	Operator name
	Date of intervention
	Technician signature
	Customer signature

Intervention carried out _____
_____
_____

TROUBLESHOOTING

PROBLEM	POSSIBLE CAUSES	CHECKS AND REMEDIES
The gate does not open or close	• No power • The gearmotor is unlocked • The transmitter battery is flat • The transmitter is broken • The stop button is stuck or broken. • The opening/closing button or the key selector switch are stuck	• Check for mains power • Contact service • Replace the battery • Contact service • Contact service • Contact service
The gate opens but does not close	• The photocells are engaged	• Check that the photocells are clean and work correctly • Contact service

DISMANTLING AND DISPOSAL

☞CAME CANCELLI AUTOMATICI S.p.A. implements an EN ISO 14001-certified and compliant Environmental Management System at its plants, to ensure environmental protection.
Please continue our efforts to protect the environment, something that CAME considers to be one of the foundations in developing its business and market strategies, simply by observing brief recommendations as regards disposal:
⚽ DISPOSAL OF PACKAGING
Packaging components (cardboard, plastic etc.) can be disposed of together with normal household waste without any difficulty, by simply separating the different types of waste and recycling them.
Before proceeding, it is always advisable to check specific regulations in force in the place of installation.
DISPOSE OF PROPERLY!
⚽ DISPOSAL OF THE PRODUCT
Our products are made with different materials. Most of them (aluminium, plastic, iron, electrical cables) can be disposed of together with normal household waste. They can be recycled if collected, sorted and sent to authorised centres.
Other components (circuit boards, transmitter batteries etc.), on the other hand, may contain pollutants.
They should therefore be removed and handed over to companies authorised to recover and recycle them.
Before proceeding, it is always advisable to check specific regulations in force in the place of disposal.
DISPOSE OF PROPERLY!

REGULATORY REFERENCES

The product in question complies with the regulations referred to in the declaration of conformity.

CAME

CAME.COM

CAME S.P.A.
Via Martiri Della Libertà, 15
31030 Dosson di Casier - Treviso - Italy
tel. (+39) 0422 4940 - fax. (+39) 0422 4941

*Manual **FA01177-EN** - 05/2018 - © CAME S.p.A. - The contents of this manual may change, at any time, and without notice. - Translated original instructions*